ridetech

Installation Instructions

Part # 12090297 - 1964-1966 Ford Mustang HQ Series ShockWave System

Front Components:

12099599	Front TruTurn Kit
12093001	Front ShockWaves
12099100	Front SwayBar

Rear Components:

12087197	Rear 4Link System
21150701	Rear ShockWaves

Recommended Tools









1964-1966 Mustang ShockWave Installation Instructions

Table of contents

Pages 2-16..... TruTurn Front Suspension
Pages 17-21..... Front ShockWaves
Pages 22-26..... Front SwayBar
Pages 27-36..... Rear 4-Link
Pages 37-39..... Rear ShockWaves
Pages 40..... Shock Adjustment

Mini-Starter required to clear TruTurn Centerlink Adapter (not Included).

The OEM Front Brakes will not work with this kit. (See Page 7 for details)

ridetech

Installation Instructions

Part # 12099599 - 1964-1966 Ford Mustang Front TruTurn System



Recommended Tools



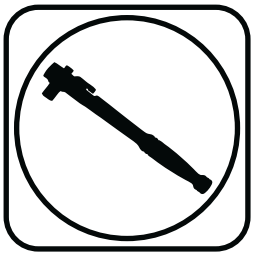





1966-1966 Ford Mustang TruTurn System

Installation Instructions

Table of contents

Page 3..... Major Components
Page 4..... Upper Control Arm Components
Page 5..... Lower Control Arm Components
Page 6..... TruTurn Steering Components
Page 7..... Hardware & Getting Started
Page 8..... Installing Strut Rod Adapter
Page 9-11..... Installing Control Arms
Page 11..... Spindle Installation
Page 12-13..... Centerlink Adapter Installation
Page 14..... Steering Arm & Stop Installation
Page 15-16.....Tie-Rod Assembly and Installation

Mini-Starter required to clear TruTurn Centerlink Adapter (not Included).

The OEM Front Brakes will not work with this kit. (See Page 7 for details)

www.ridetech.com

REV1 10/8-/20

Major Components Assembled .....In the box

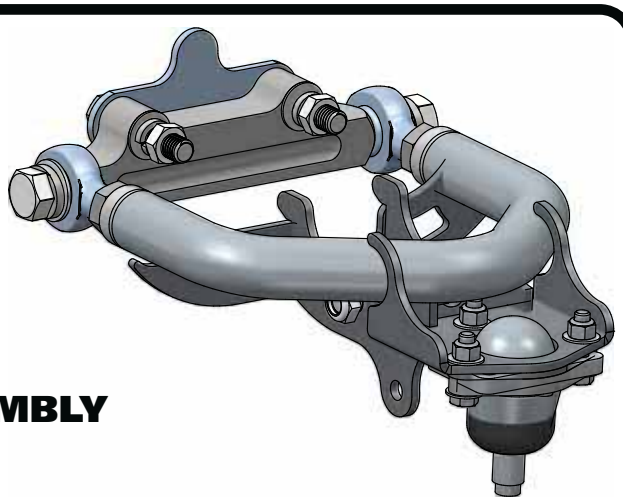

DRIVER UPPER CONTROL ARM ASSEMBLY

Exploded View on Page 4

DRIVER LOWER CONTROL ARM ASSEMBLY

Exploded View on Page 5

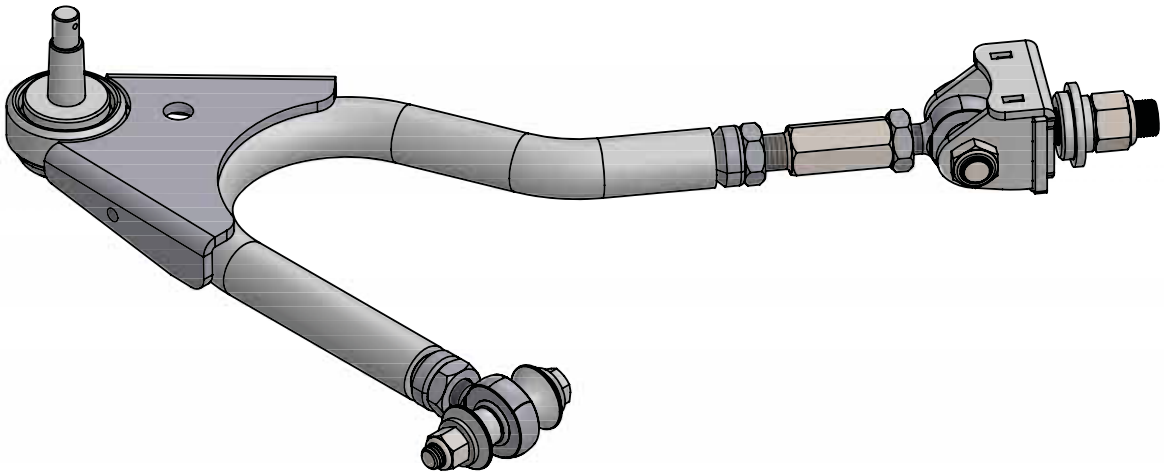

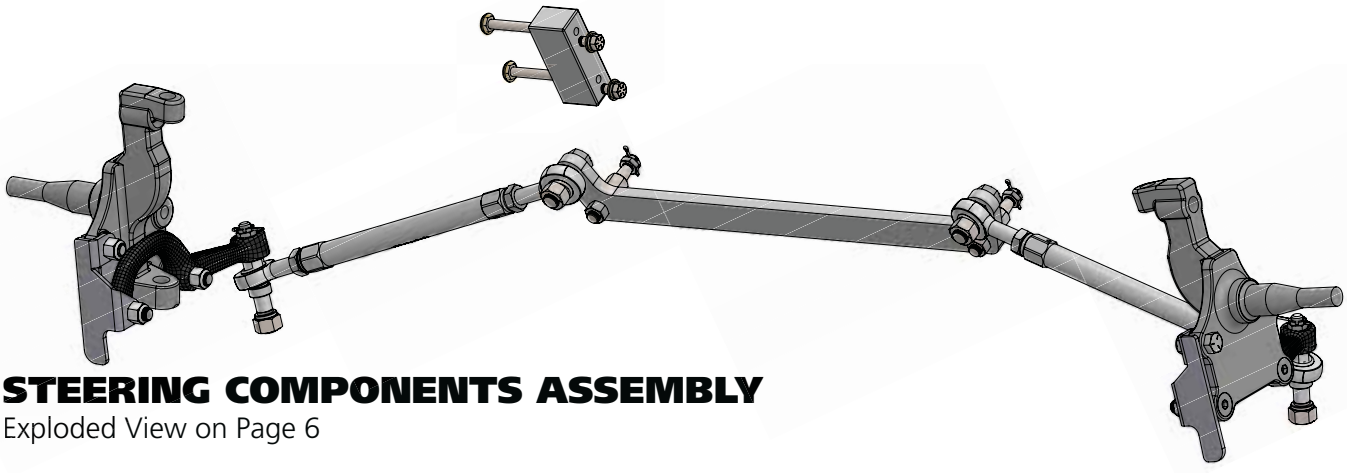

STEERING COMPONENTS ASSEMBLY

Exploded View on Page 6

Upper Control Arm Components .....In the box

Item #	Part Number	Description	QTY
1	90002339	Driver Upper Control Arm **(Shown)**	1
1	90002340	Passenger Upper Control Arm	1
2	90001589	Heim End	4
3	90009967	Upper Cross Shaft	2
4	70010866	Ball joint Assembly - Proforged # 101-10083	2
5	90002633	Ball joint Spacer	2
6	90002341	3/16" Alignment Shim	2
7	99621002	5/18"-18 x 1 3/4" Hex Bolt	4
8	99623001	5/8" SAE Flat Washer	4
9	99623002	5/8" Split Lock Washer	4
10	99311002	5/16"-18 x 1 1/4" Hex Bolt	6
11	99312003	5/16"-18 Nylok Nut	6
12	99313002	5/16" SAE Flat Washer	12
13	90002067	Shock Bearing Spacers	4

Driver Side Shown

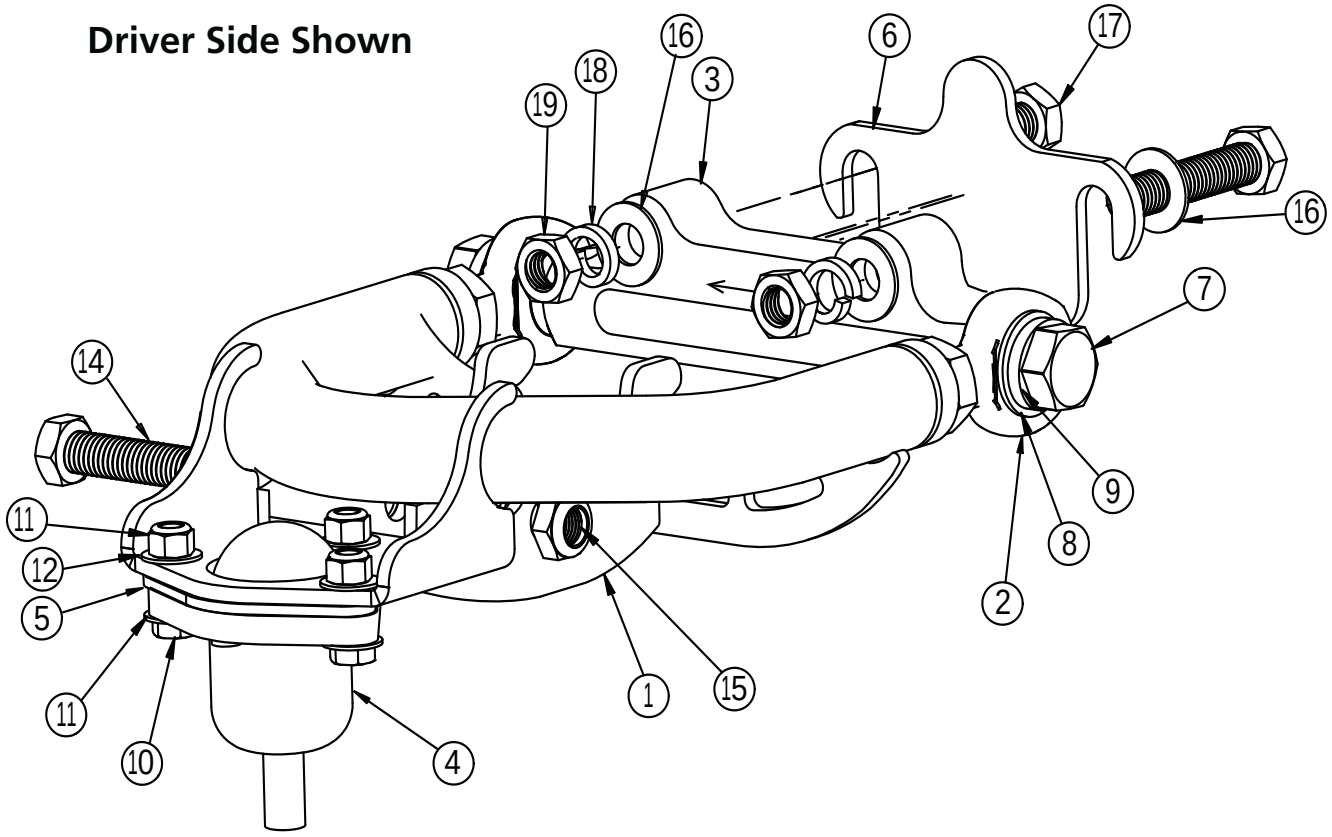

Lower Control Arm Components .....In the box

Item #	Part Number	Description	QTY
20	90003221	Driver Lower Control Arm **(Shown)**	1
21	90003222	Passenger Lower Control Arm	1
22	90003223	Strut Rod Frame Bracket Assembly	2
23	90003228	Frame T-Bushing	2
24	90001589	3/4"-16 x 5/8" Bolt Heim End - RH	2
25	90001591	3/4"-16 x 5/8" Bolt Heim End - LH	2
26	99752004	3/4"-16 Jam Nut - RH	4
27	99752006	3/4"-16 Jam Nut - LH	2
28	90002338	Frame Heim Spacer - 1/2" ID x 1.00" Long	4
29	90003225	Strut Rod Bracket Heim Spacer - 5/8" ID x .320" Long	4
30	90002582	Heim End Double Adjuster	2
31	90000898	Lower Ball joint - Proforged # 101-10013	2

Driver Side Shown

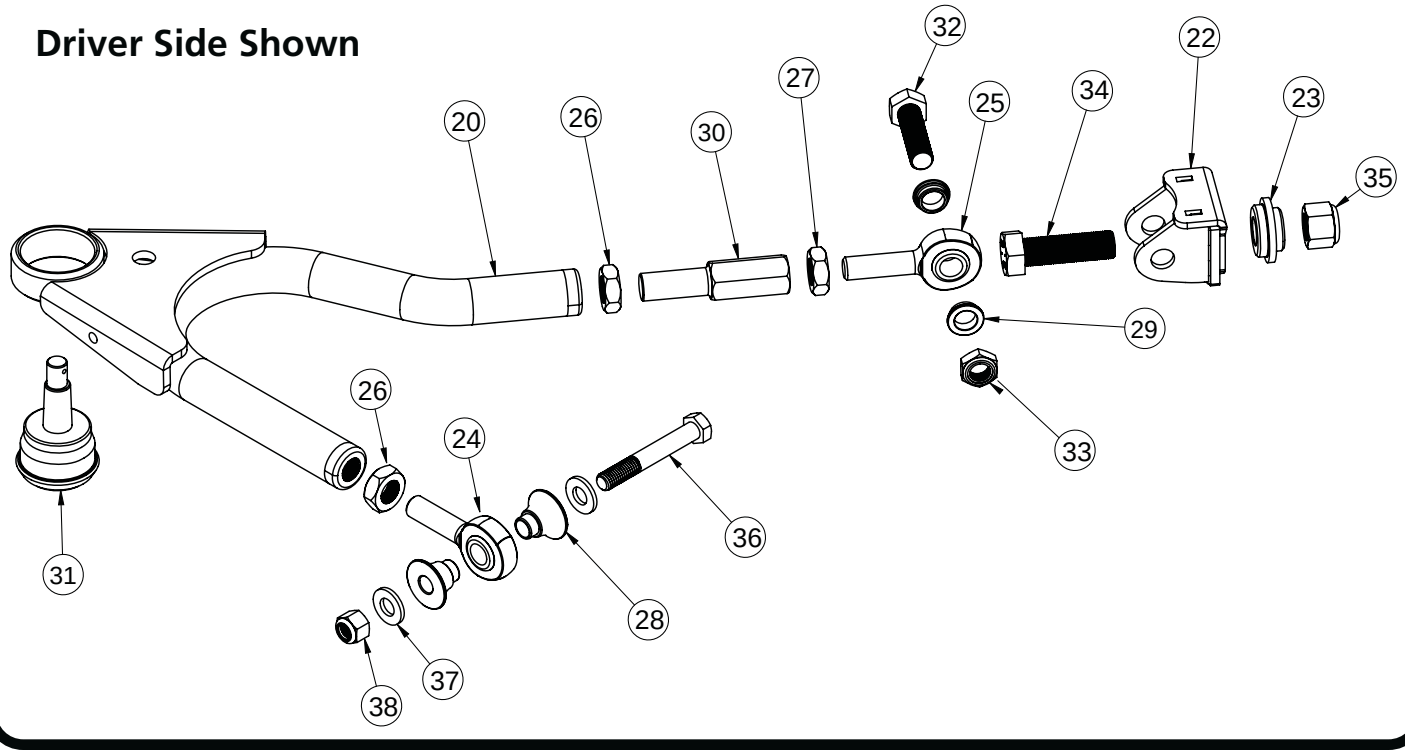

TruTurn Steering Components .....In the box

Item #	Part Number	Description	QTY
39	11009303	Ridetech Tall Spindle	1 pr
40	90002345	Drag Link Stud	2
41	90002351	Inner Tie Rod Stud	2
42	90002346	Tie-Rod Adjuster	2
43	90002347	Driver Steering Arm	1
44	90002348	Passenger Steering Arm	1
45	90002349	Bolt On Steering Stop - Driver	1
46	90002350	Bolt On Steering Stop - Passenger	1
47	90001582	Heim End - 5/8"-18 x 5/8" Bolt - LH Thread	2
48	90001590	Heim End - 5/8"-18 x 5/8" Bolt - RH Thread	2
49	90009931	Outer Tie Rod Stud	2
50	90002344	Centerlink Adapter	1

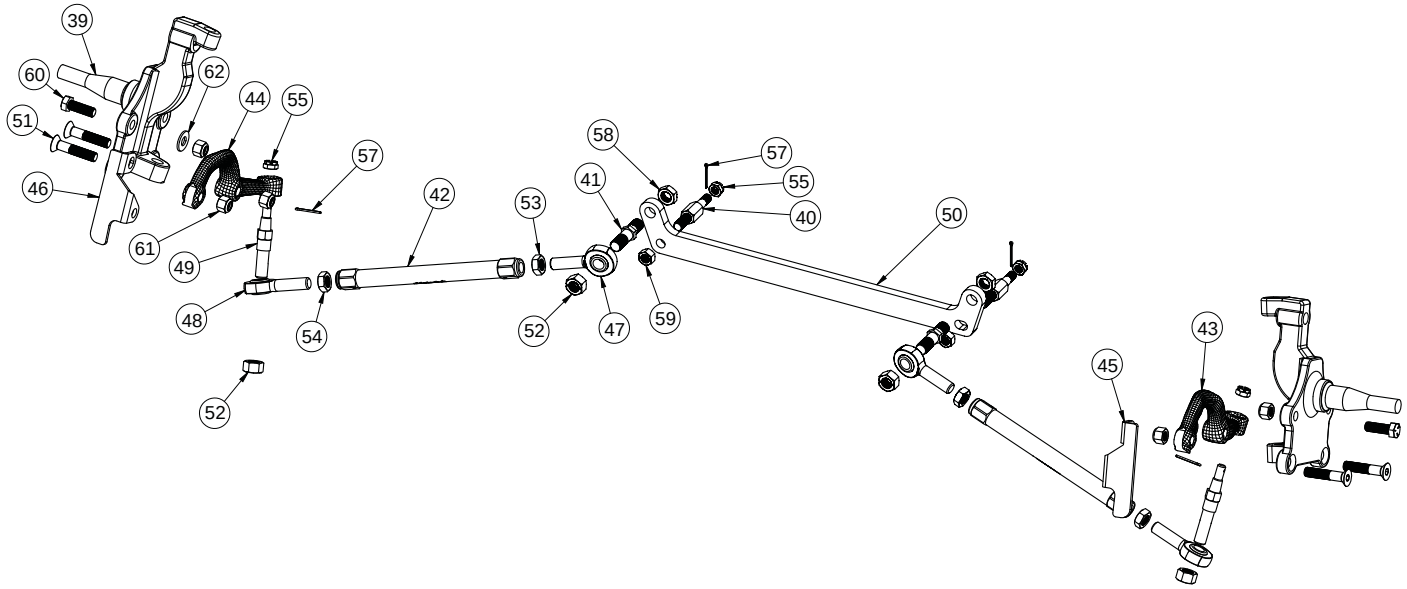

Hardware Shown in Diagrams .....Kit# 99010164

ITEM #	Shock To Upper Control Arm		QTY
14	99501005	1/2"-13 x 3 1/2" bolt GR8	2
15	99502009	1/2"-13 Nylok Nut GR8	2
16	99503014	1/2" SAE Flat Washer GR8	4
	Upper Control Arm To Car		
16	99503014	1/2" SAE Flat Washer GR8	8
17	99501050	1/2"-13 x 2 1/2" bolt GR8	4
18	99503015	1/2" SPLIT LOCK WASHER, GR8	4
19	99502021	1/2"-13 HEX Nut GR8	4
	Upper Ball Joint To Spindle		
	99502017	1/2"-20 Castle Nut	2
	Heim End Coupler		
26	99752004	3/4-16 Jam Nut	2
27	99752006	3/4-16 LH Jam Nut	2
	Heim End To Strut Rod Frame Bracket		
32	99621031	5/8-18 X 2 1/4" Hex Bolt Gr8	2
33	99622006	5/8-18 Thin Nylok Nut	2
	Strut Rod Frame Bracket To Car		
34	99751005	3/4-16 X 2" Hex Bolt Gr8	2
35	99752001	3/4-16 Nylok Nut Gr8	2
	Lower Control Arm To Car		
36	99501005	1/2-13 X 3 1/2" Bolt GR8	2
37	99503001	1/2" SAE Flat Washer	4
38	99502001	1/2-13 Nylok Nut	2

ITEM #	Spindle To Steering Arm		QTY
51	99501054	1/2-20 X 2 1/2" Flat Head Socket Cap Screw	2
	Steering Linkage		
52	99622003	5/8"-18 TOP LOCK NUT	4
53	99800003	5/8"-18 RH Jam Nut	2
54	99800002	5/8"-18 LH Jam Nut	2
55	99432005	7/16"-20 Castle Nut	2
56	99433002	7/16" SAE Flat Washer	2
57	99952002	3/32" Cotter Pin	2
	Draglink Adapter		
55	99432005	7/16"-20 Castle Nut	2
56	99433002	7/16" SAE Flat Washer	4
57	99952002	3/32" Cotter Pin	2
58	99622005	5/8"-18 THIN mechnical locking nut	2
59	99502010	1/2"-20 Mechanical Locking Nut	2
	Steering Stop		
60	99501053	1/2"-13 x 1 1/2" Hex Bolt GR8	2
61	99502009	1/2"-13 Nylok Nut GR8	2
62	99503014	1/2" SAE Flat Washer GR8	2

Getting Started.....

Congratulations on your purchase of the Ridetech TruTurn System. This System has been designed to give your Mustang excellent handling along with a lifetime of enjoyment. Some of the key features of the Tru-Turn System: Ball joint angles have been optimized for the lowered ride height, eliminated rubber bushings to get rid of bushing deflection and provide free suspension movement through the entire range of travel. The geometry has been optimized for excellent handling, driveabilty and minimal bump steer.

Note: These control arms are designed for use with the Ridetech CoilOvers and the MuscleBar swaybar. **The factory shocks and springs or the factory sway bar will not fit these arms.**

Mini-Starter required to clear TruTurn Centerlink Adapter (not Included).

Brake Kits

The Mustang TruTurn Suspension package uses a GM Spindle used on 67-69 F body, 64-72 A body, and 68-74 X body. Any brake kit designed for this spindle will work. It just **needs a 4 ½" on 5 bolt pattern** to keep the same bolt pattern as the rear of the Falcon.

We collaborated with Baer and Wilwood to develop brake kits that work in harmony with our suspension. Depending on wheel size and your braking needs, both Wilwood and Baer have brake kits that will work with your car. Please visit our website to review options for your application.

1. Remove the entire front suspension from the car including the centerlink, idler arm, and pitman arm. Refer to a Factory Service Manual for the proper method. The control arms, spindles, and steering linkage will all be replaced with the TruTurn package.

Installing Strut Rod T-Bushing

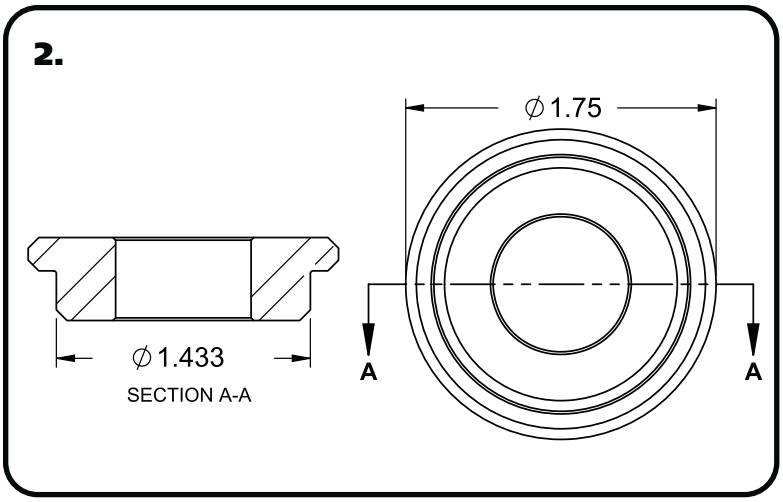

2. This kit includes a t-bushing for the strut rod bushing factory hole.



3. Test fit the t-bushing in your car's strut rod mount to help determine if the strut rod hole needs buffed out. The t-bushing is installed from the front side of the car.



4. Insert 3/4"-16 x 2" bolt in the strut rod frame bracket. The head of the bolt needs to be on the side of the bracket with the 2 mounting ears.

Installing Lower Control Arm



5. With the 3/4"-16 x 2" bolt installed in the bracket, attach the bracket to the front heim of the control arm with the flat side of the bracket on the same side as the ball joint pin. The bracket is installed with a 5/8" ID x .320" spacer on each side of the heim. The spacers need to be installed with the small outside diameter against the heim end. Align the holes of the bracket with the through holes of the spacers and heim. Install a 5/8"-18 x 2 1/4" bolt through the aligned holes. Install a 5/18"-18 thin nylok nut on the threads of the bolt and torque to 45 ftlbs.



6. Insert the 3/4" bolt of the strut rod adapter bracket through the center hole of the t-bushing. The t-bushing and threads of the bolt should be to the front of the car.



7. Install a 3/4"-16 nylok nut on the threads of the bolt sticking through the t-bushing. Torque to 120 ftlbs.

Installing Lower & Upper Control Arm



8. Install the 2 aluminum spacers into the rod end that goes into the factory control arm pivot. Slip the control arm into the factory frame mount.



9. Align the factory holes with the control arm through hole. Install a 1/2" flat washer on a 1/2"-13 x 3 1/2" hex bolt. Insert the bolt/ washer through the aligned holes. Install a 1/2" flat washer and 1/2"-13 nylok nut on the threads of the bolt. Torque to 75 ftlbs.



10. Bolt the upper StrongArm to the body using ½"-13 x 2 ½" bolts, flat washers and lock washers. The ARROW points to the front of the vehicle. A shim is supplied and may need to be installed between the body and the arms to achieve proper alignment. The arms are preset at the factory so the alignment should be close, but the vehicle must be aligned before driving.

Note: The upper arm mounting holes on many cars have been redrilled 1" lower. This is done to improve the handling. Our cross shaft has the drop built into it; **make sure to use the factory mounting holes.**

Upper Control Arm & Spindle Installation



11. Install a 1/2" flat washer, 1/2" split lock washer, and 1/2"-13 nut on the threads of the 2 bolts sticking through into the engine compartment. Torque to 75 ftlbs.



12. Install the spindle on the lower ball joint pin. Torque the ball joint castle nut to 65 ftlbs and tighten to align the cotter pin holes. Install the cotter pin in the ball joint pin hole and bend the ends of the cotter pin to hold it in place. Install the grease zerk supplied with the ball joint.



13. Install the spindle on the upper ball joint pin. Torque the ball joint castle nut to 50 ftlbs and tighten to align the cotter pin holes. Install the cotter pin in the ball joint pin hole and bend the ends of the cotter pin to hold it in place. Install the grease zerk supplied with the ball joint.

Centerlink Adapter Installation



14. The studs with the long hex on them will get installed into the factory centerlink with the taper going into the centerlink, a 7/16" castle nut is used to attach it to the centerlink. The straight shank will point to the front of the car.

Note: It may be necessary to install 7/16" washers under the castle nut to get the cotter pin engaged properly.



15. Torque the nuts to 35 ftlbs and tighten as needed to align cotter pin. Install cotter pin and bend the ends.

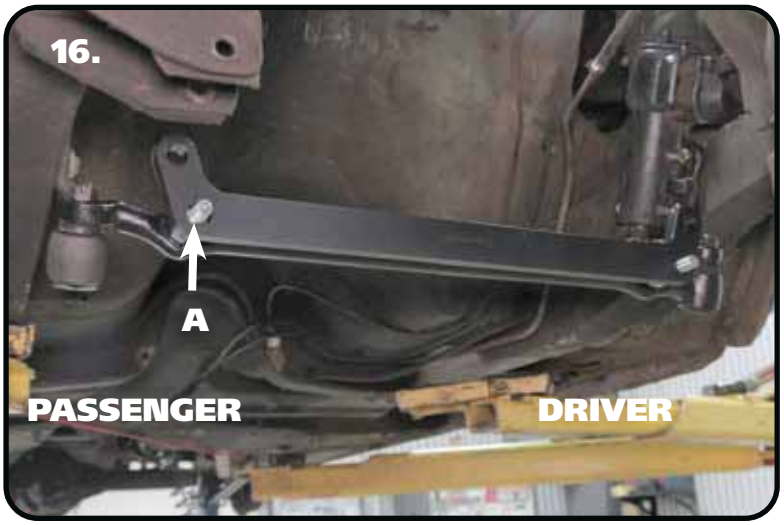

16. The centerlink bracket has one attachment hole [A] that is slotted. This is to accommodate the variations in manufacturing and machining processes, as well as any wear that may have occurred to the original centerlink over time. The slot goes on the passenger side centerlink adapter stud.

Centerlink Adapter Installation



17. Install the 1/2"-20 mechanical locking nuts and torque to 50 ftlbs.



18. The studs with the short hex get installed into the centerlink adapter. The short side goes into the adapter attached with the 5/8"-18 thin top lock nut, with the long side of the stud pointing forward.



19. Install the 5/8"-18 **THIN** mechanical locking nut on the threads of the stud sticking through the centerlink adapter and torque to 45 ftlbs.

Steering Arm & Stop Installation

20a.

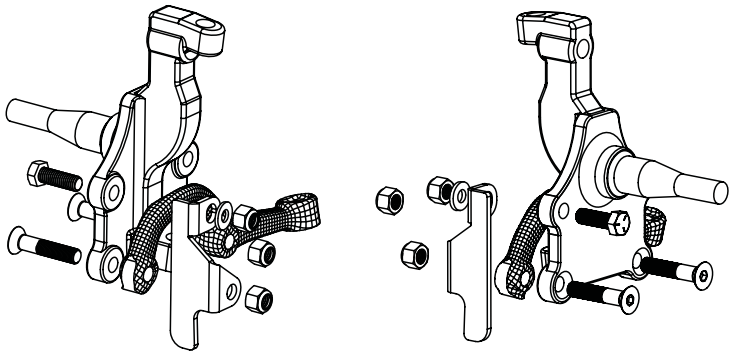

PASSENGER DRIVER

20a. Install the steering arms and steering stops onto the spindle using **Images 20a & 20b** as a reference. The steering arms angle toward the centerlink, and the tie rod mounting holes are to the rear of the car. The steering stops are marked D and P.

The steering arm is attached to the spindle using ½"-20 x 2 ½" flat socket cap bolts and nylok nuts. Torque to 100 ftlbs.

The upper tab of the steering stop is attached to the spindle using ½"-13 x 1 ½" hex head bolt, 1/2" SAE flat washer, and Nylok. Torque to 75 ftlbs.

20b.

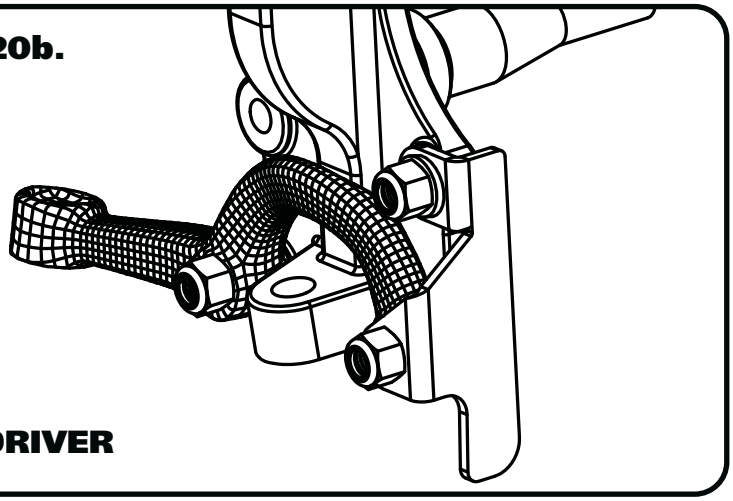

DRIVER

29b. You will notice in **Image 29b**, the bottom hole of the steering stop is mounted on top of the front steering arm mounting hole. The top mounting tab of the steering stop is on the engine side of the spindle.

21.



21. Install the stud with the round flange into the steering arm with the taper going into the steering arm. Torque the nuts to 35 ftlbs and tighten as needed to align cotter pin hole and install cotter pin.

Tie Rod Assembly & Installation

22.

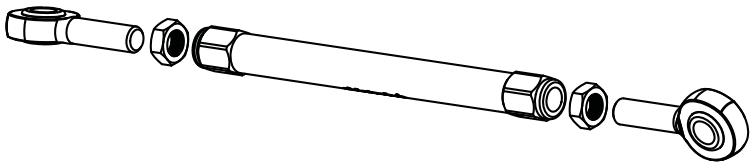

22. The tie rod adjuster has 2 threads in it; 5/8"-18 RH & 5/8"-18 LH. The 5/8"-18 LH thread is marked with a groove on the outside of the adjuster. The tie rod can now be assembled to a center to center length of 14 1/4" to start with, having equal amount of threads on both ends. These aluminum adjusters have a left hand thread on one end and a right hand thread on the other. You should use anti seize when threading the heim ends into the adjuster. **FOR YOUR SAFETY, THE TIE ROD & HEIM NEED A MINIMUM OF 15/16" OF THREAD ENGAGEMENT INTO THE TIE ROD ADJUSTER.**



23. Install one end of the tie rod onto the stud of the centerlink adapter. Install a 5/8"-18 mechanical locking nut on the threads of the stud and torque to 45 ftlbs.



24. Install the outer end of the tie rod on the steering arm stud.

Tie Rod Installation



25. Install a 5/8"-18 mechanical locking nut. Torque to 45 ftlbs.

26. Double check that you have tightened all hardware to the proper torque. If you are going to install the Ridetech MuscleBar, now is a good time to do it.

Suggested Alignment Specs:

Camber:	Street:	-.5 degrees
Caster:	Street:	+3.0 to + 5.0 degrees
Toe:	Street:	1/16" to 1/8" toe in

ridetech

Installation Instructions

Part # 12093001 - 64-66 Ford Mustang Front HQ Shockwave, for StrongArms

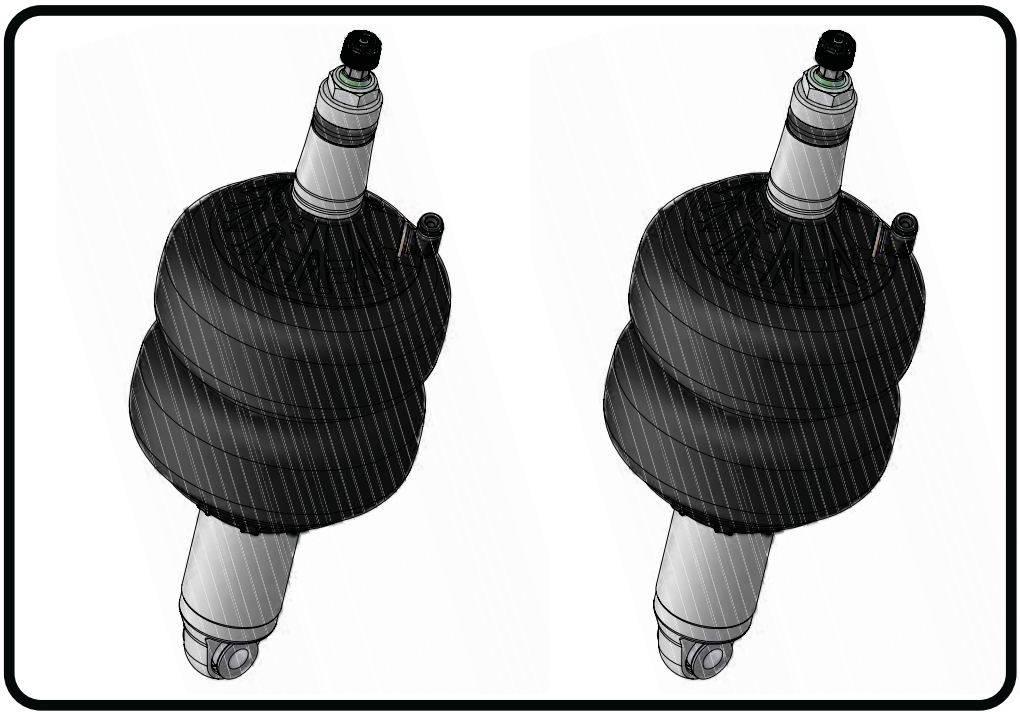

Recommended Tools





1000 Series Bellow, 2.0" Stud/Eye 3.6" Shock

Installation Instructions

THESE SHOCKWAVES ARE DESIGNED TO BE USED WITH RIDETECH STRONGARMS

Table of contents

Page 18..... Included components
Page 19-20..... Shockwave Installation
Page 21..... Notes and Care of Your Shockwave

ShockWave Dimensions:

Mount to Mount:

Compressed:	10.30"
Ride Height:	12.13"
Extended:	13.32"

www.ridetech.com

812-482-2932

Major Components .....In the box

Item #	Part #	Description	QTY
1	982-10-803	3.6" Stroke HQ Series Shock	2
2	90009988	2" Stud Top (Installed on Shock) - Includes Adjuster Knob & Screw	2
3	24090199	1000 Series 6.5" Double Convoluted AirSpring	2
4	234-00-153	AirSpring Locking Ring (Installed on shock)	2
5	99055000	Locking Ring Set Screw (Installed on shock)	2
6	90002062	1/2" ID Bearing Spacers	4
7	90002312	2" Aluminum Stud Top Base	2
8	90001904	Bottom Delrin Ball	2
9	90001903	Top Delrin Ball	2
10	90001902	Delrin Ball Aluminum Top Cap	2
11	99562003	9/16"-18 Thin Nylok Nut	2
12	210-35-120-0	Adjuster Knob - (90009988 assembly)	2
13	90009969	#4-40 X 1/4" SS, 18-8 Pan Head Torx Cap - (90009988 assembly)	2
14	90002356	Upper ShockWave Mount	2
15	90000563	Aluminum Top Cover Plate	2
	90001994	5/8" ID Bearing (installed in shock and eyelet)	4
	90001995	Bearing Snap Ring (installed in shock and eyelet)	8
	99311012	5/16" X 1" Flange Bolt	6

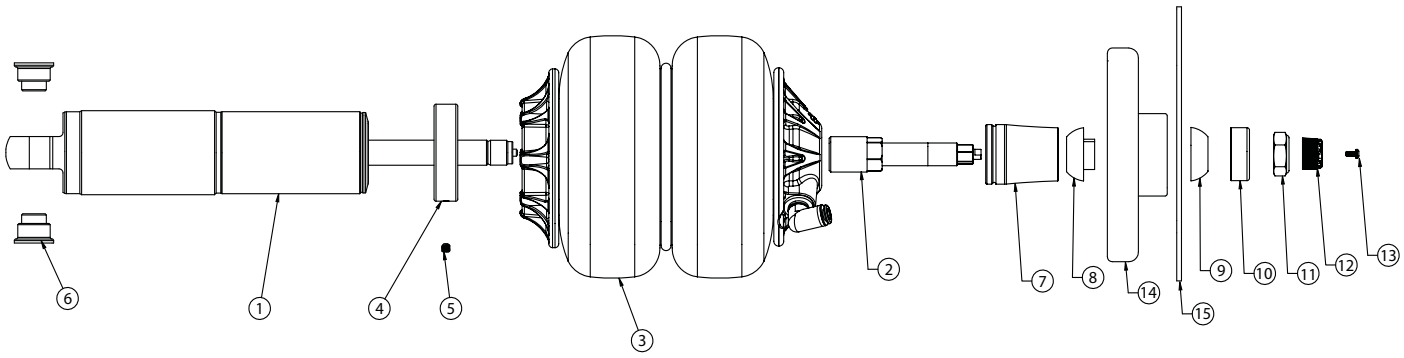

THE DELRIN BALL REQUIRES A 3/4" HOLE FOR THE FLANGE TO GO THROUGH. THIS CAN BE DRILLED WITH A UNIBIT.

WARNING: ATTEMPTING TO REMOVE THE AIR FITTING WILL DAMAGE IT AND VOID THE WARRANTY.

ShockWave Installation



1. Install the Ridetech StrongArms. Also, it is easier to install the ShockWave with the CoilSpring Shield removed.

2. Drill a 3/8" Hole in the CENTER of the large part of the Key Hole Slots. Do this for each Key Hole in the driver and passenger shock towers.



3. Hold the Aluminum Upper Mount agianst the bottom of the shock tower lining up the threaded holes with the holes drilled in the shock tower.



4. Lay the Upper Plate on Top of the shock tower with the ShockWave Mount protruding through the large center hole. Line up the the holes in the Upper Plate with the holes drilled in the shock tower and the holes in the ShockWave mount. If the INNER Hole doe not line up, flip the plate over. Install a 5/16" x 1" Flange Bolt in each hole and tighten.

ShockWave Installation

5.

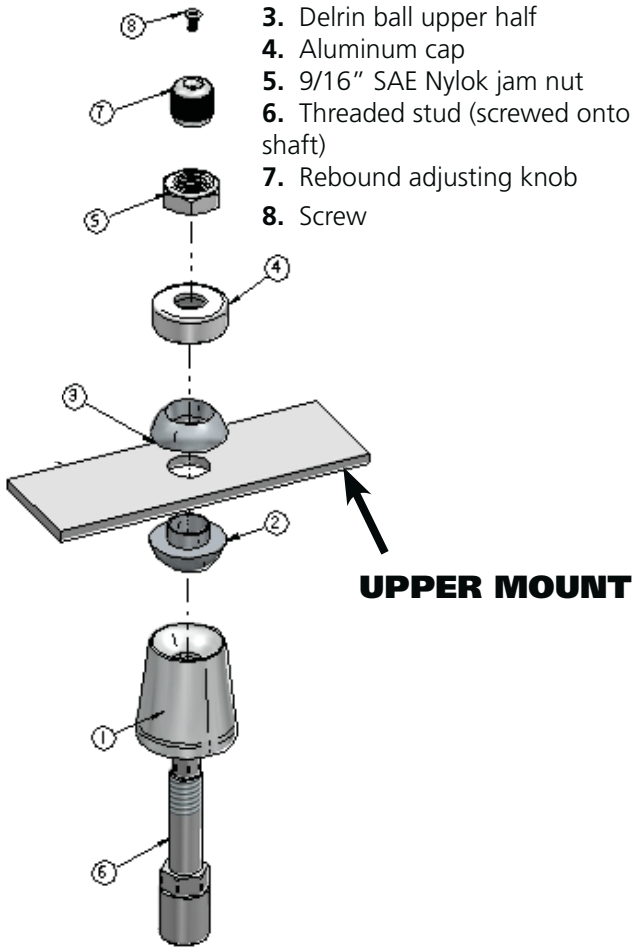

1. Stud top aluminum base
2. Delrin ball lower half
3. Delrin ball upper half
4. Aluminum cap
5. 9/16" SAE Nylok jam nut
6. Threaded stud (screwed onto shock shaft)
7. Rebound adjusting knob
8. Screw



Note: The airline must also be routed at this time. It can be ran through the subframe toward the rear of the vehicle.

5. The air fitting location can be rotated by twisting the bellow assembly separate of the shock. Place the Shockwave into the coil spring pocket with the stud sticking through the OEM shock hole. See assembly **Diagram 5**.

1. Stud top aluminum base
2. Delrin ball lower half
UPPER MOUNT
3. Delrin ball upper half
4. Aluminum cap
5. 9/16" SAE Nylok jam nut
6. Threaded stud (screwed onto shock shaft)
7. Rebound adjusting knob
8. Screw

6. Install the a Bearing Spacer in each side of the Bearing. The SMALL part of the spacer inserts into the Inside Diameter of the shock bearing. Raise the lower arm up to the Shockwave and bolt them together using the 1/2" x 2 1/2", & Nylok Nuts supplied with the ShockWaves. Torque to 50 ftlbs.

7. Reattach the outer coil spring shield. A hole can be drilled into it to allow airline access to the Shockwave. Use a rubber grommet to prevent airline damage.

Check air spring clearance through full suspension travel. Allowing the air spring to rub will cause failure and is not a warrantable situation.

8. Ride height should be around 90 psi but will vary to vehicle weight and driver preference.

Notes and Care of your Shockwaves

NOTES:
WARNING: ATTEMPTING TO REMOVE THE AIR FITTING WILL DAMAGE IT AND VOID THE WARRANTY.

TIGHTENING THE TOP 9/16"-18 NUT: SNUG THE NUT DOWN AGAINST THE TOP CAP. YOU NEED TO BE ABLE TO ARTICULATE THE SHOCK BY HAND.

You can clock the airfitting location on the ShockWave by turning the AirSpring assembly of the shock. Make sure the fitting doesn't contact the frame.

When cutting the airline, use a razor blade. The cut needs to be a clean cut and square for the airline to seal properly.

The Locking ring on the shock is NOT adjustable. These rings are set at the factory to optimize the AirSpring stroke with the shock stroke.

The care and feeding of your new ShockWaves

1. Although the ShockWave has an internal bumpstop, **DO NOT DRIVE THE VEHICLE DEFLATED RESTING ON THIS BUMPSTOP. DAMAGE WILL RESULT**. The internal bumpstop will be damaged, the shock bushings will be damaged, and the vehicle shock mounting points may be damaged to the point of failure. This is a non warrantable situation.

2. Do not drive the vehicle overinflated or "topped out". Over a period of time the shock valving will be damaged, possibly to the point of failure. This is a non warrantable situation! If you need to raise your vehicle higher that the ShockWave allows, you will need a longer unit.

3. The ShockWave is designed to give a great ride quality and to raise and lower the vehicle. **IT IS NOT MADE TO HOP OR JUMP!** If you want to hop or jump, hydraulics are a better choice. This abuse will result in bent piston rods, broken shock mounts, and destroyed bushings. This is a non warrantable situation.

4. Do not let the ShockWave bellows rub on anything. Failure will result. This is a non warrantable situation.

5. The ShockWave product has been field tested on numerous vehicles as well as subjected to many different stress tests to ensure that there are no leakage or durability problems. Failures have been nearly nonexistent unless abused as described above. If the Shockwave units are installed properly and are not abused, they will last many, many years. ShockWave units that are returned with broken mounts, bent piston rods, destroyed bumpstops or bushings, or abrasions on the bellows will not be warrantied.

ridetech

Installation Instructions

Part # 12099100 - 1964-1966 Mustang Front MuscleBar

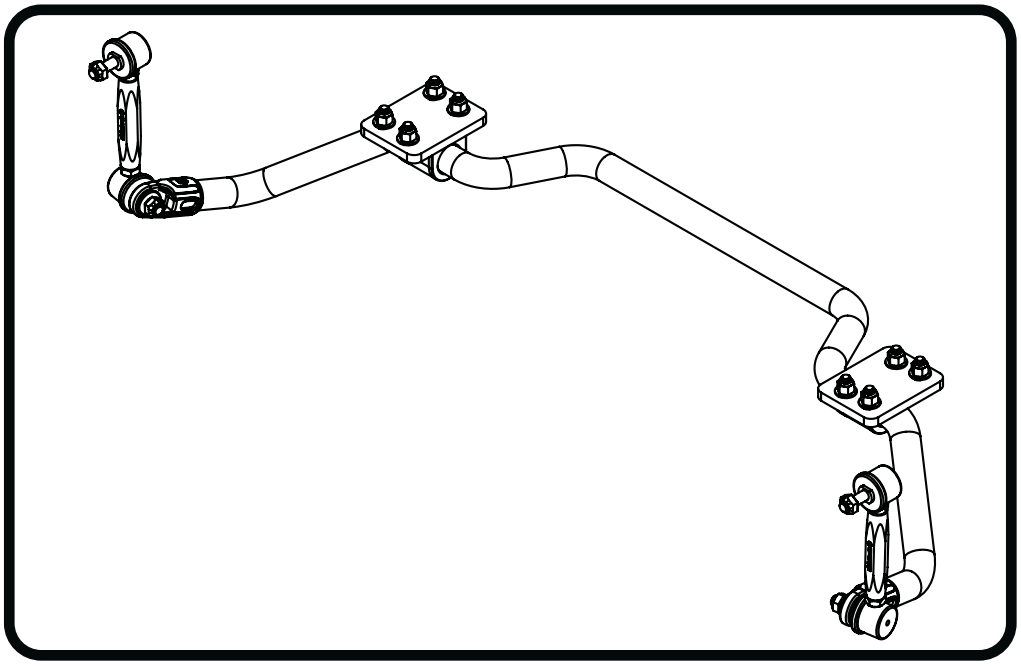

Recommended Tools





1964-1966 Mustang Front MuscleBar
Installation Instructions

Table of contents

Page 23..... Included Components and Hardware List
Page 24-26..... Sway Bar Installation

THIS SWAYBAR KIT IS DESIGNED TO BE USED WITH RIDETECH STRONGARMS ONLY. IT WILL NOT FIT THE OEM CONTROL ARMS.

www.ridetech.com

REV2 4/8/22

Major Components .....In the box

Part #	Description	QTY
90003248	Front Sway Bar	1
90002572	Bushing Strap	2
70015013	Lined Sway Bar Bushing	2
90003213	Offset Mounting Plate	2
90002571	90 Degree End Link	4
90001253	Sway Bar End Link T-Bushing	2
90001258	End Link to Sway Bar Adapter Bushing	4

Hardware List .....In the box (Kit# 99010162)

Part #	Description	Usage	QTY
99371005	3/8"-16 x 1 1/4" Hex Bolt	Bushing Strap to Frame Mount	8
99373002	3/8" Flat Washer	Bushing Strap to Frame Mount	16
99372001	3/8"-16 Nylok Nut	Bushing Strap to Frame Mount	8
99623001	5/8" SAE Flat Washer	NOT USED FOR THIS INSTALL	2

Getting Started.....

THIS SWAYBAR KIT IS DESIGNED TO BE USED WITH RIDETECH STRONGARMS ONLY. IT WILL NOT FIT THE OEM CONTROL ARMS.

Install all Front suspension components before installing the MuscleBar.

Remove the OEM sway bar to prepare for the MuscleBar installation.

Note: This sway bar kit utilizes a anti-friction lining in the sway bar bushing. The lining allows the sway bar to move freely and quietly in the bushing. No lubrication is required.



1. Open the sway bar bushing at the split and slip it **OVER** the sway bar. Do this for both bushings.

Sway Bar Installation

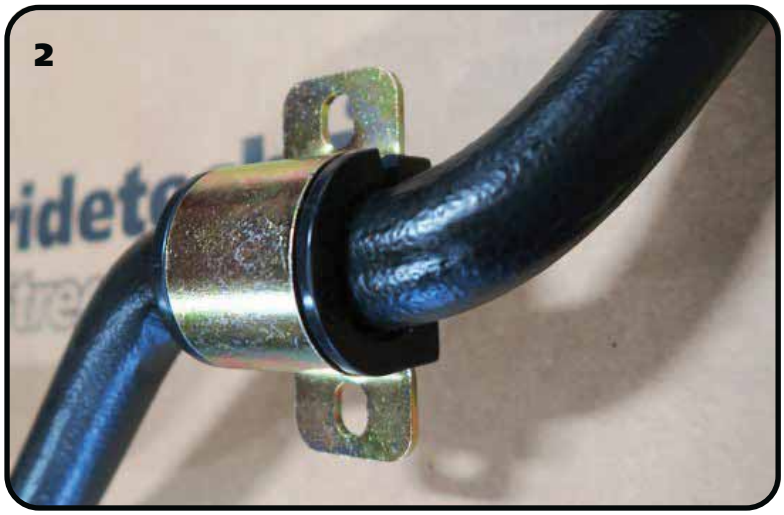

2. Install bushing straps over the poly sway bar bushings.



3. The offset mounting plate will get bolted to the OEM sway bar mount. It is bolted to the OEM holes using the SLOTTED holes in the offset plate with the (2) round holes offset toward the engine. Install a 3/8" flat washer on (2) 3/8"-16 x 1 1/4" hex bolts. A bolt/washer will go in each of the (2) mounting holes. Insert a bolt/washer through each slotted hole and OEM mounting hole. With the bolt/washers installed, install a 3/8" flat washer on the threads followed by a 3/8"-16 nylok nut. Torque the hardware to 30 ftlbs.



4. Slide the sway bar into position on the car. The sway bar arms will be bending upward with the center dropping toward the ground. Install a 3/8" flat washer on (4) 3/8"-16 x 1 1/4" hex bolts. A bolt/washer will go in each of the 4 mounting holes. With the bolt/washers installed, install a 3/8" flat washer on the threads followed by a 3/8"-16 nylok nut. Do **NOT** completely tighten the hardware. It will be left partially loose until the end links are installed.

Sway Bar Installation

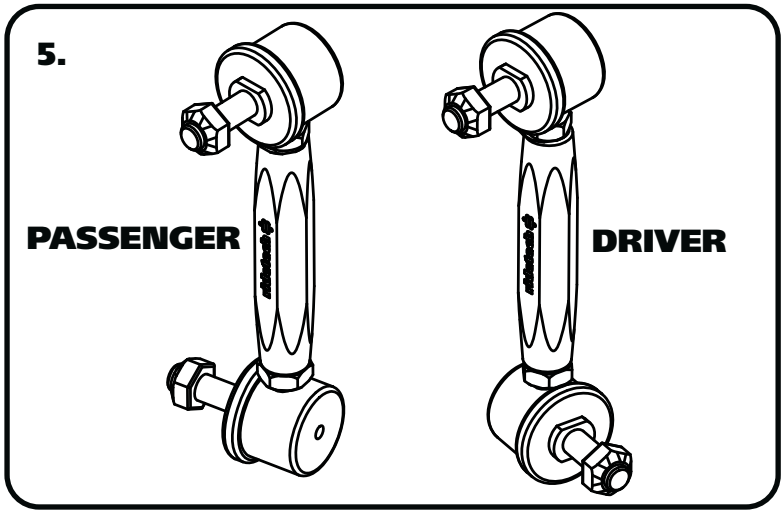

5. The driver and passenger sway bar linkages are clocked opposite of each other. With the top stud pointing toward you, the stud on the lower should be pointing to the right for the driver side, to the left for the passenger side. Using **Diagram 5** as a reference, set the linkage to 6" center to center. Snug the jam nuts against the center adapter.



6. Remove the nut from the top end link. Insert the stud of the end link in the tab of the upper control arm with the stud pointing to the rear of the car. The lower stud should be pointing toward the engine. Install the nut on the stud of the end link and torque to 37 ftlbs. Repeat on the second side.



7. Remove the nut from the bottom end link. Install a t-bushing on the lower 90 degree end link. The t-bushings are installed with the large diameter against the shoulder of the end link.

Drivers side shown in picture.

Sway Bar Installation



8. Insert the 90 degree end link/t-bushing into the swaybar end with the threads pointing toward the engine.



9. Install a 2nd t-bushing with the small diameter into the swaybar. Install the nut and torque to 37 ftlbs. Do this for both sides.



10. Install a 2nd t-bushing with the small diameter into the swaybar. Install the nut and torque to 37 ftlbs. Do this for both sides.

11. The bushing strap hardware can now be tightened. Torque to 30 ftlbs.

12. Check sway bar and end link clearance through full suspension travel.

13. Ensure that the end links do not bind through full suspension travel.

ridetech

Installation Instructions

Part # 12087197 -1965-1970 Mustang Rear Bolt-in 4 Link

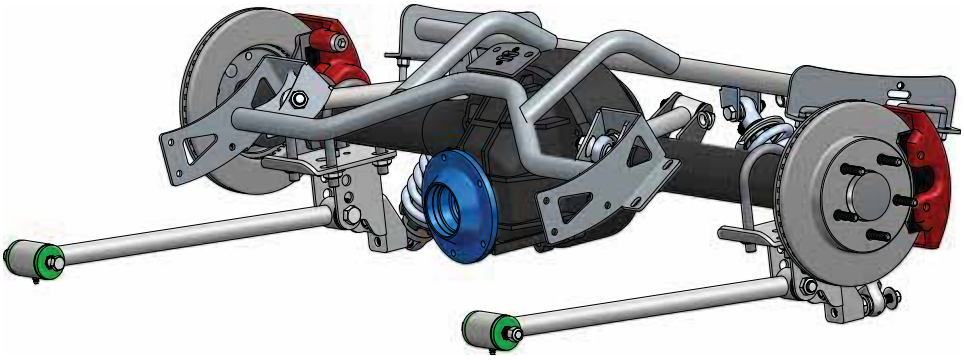

Recommended Tools



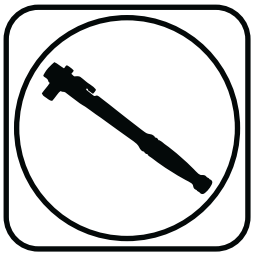





1965-1970 Mustang Rear Bolt-in 4 Link

Installation Instructions

Table of contents

Page 2..... Included Components
Page 3..... Hardware List
Page 4..... Getting Started & Cradle Installation
Page 5..... Lower Axle Mount Installation
Page 6..... R-Joint Bar Assembly
Page 7..... Setting Pinion Angle
Page 8..... Upper Bar Axle Tab Installation
Page 9..... Installing Lower Bars & Axle Tabs
Page 10..... Installing Axle Tabs & ShockWaves/CoilOvers

NOTE: If your car is equipped with a differential that has the axle tubes swedged to 2 1/4", you will need (4) 99566009 u-bolts. See page 3.

R-JOINT ADVANCED ROD END TECHNOLOGY

Major Components .....In the box

Item #	Part #	Description	QTY
1	90002198	Upper Cradle	1
2	90001444	Lower Axle Mount	2
3	90003094	Lower Bar Assembly - 21 3/4" center to center	2
4	70013539	Front Lower Outer R-Joint Spacer	2
5	90003091	Upper Bar - 11 3/4" center to center	2
6	70013364	RH R-Joint Threaded Housing End (installed in bars)	4
	70013564	LH R-Joint Threaded Housing End (installed in bars)	4
7	70011897	Upper Bar Tab - Tall	4
8	70012018	Upper Bar Tab - Short	2
9	90001624	Aluminum Lower Shock Mount	2
10	70002825	Lower Shock Stud	2
11	70013334	R-Joint Spacers	14
12	90002285	Square U-Bolts	7
13	99566001	Axle U-Bolts	4
14	99752004	3/4"-16 RH Jam Nut (installed on R-Joint Ends)	4
	99752006	3/4"-16 LH Jam Nut (installed on R-Joint Ends)	
	90002067	Lower Shock Spacers	4
	70010694	Bar Tab Setting Jig	2
R-Joint Components - (Installed in bar ends)			
	70013279	Retaining Ring	8
	70013280	Wavo Wave Spring	8
	70013275	R-Joint Center Ball	8
	70013276	R-Joint Composite Center Ball Cage	8

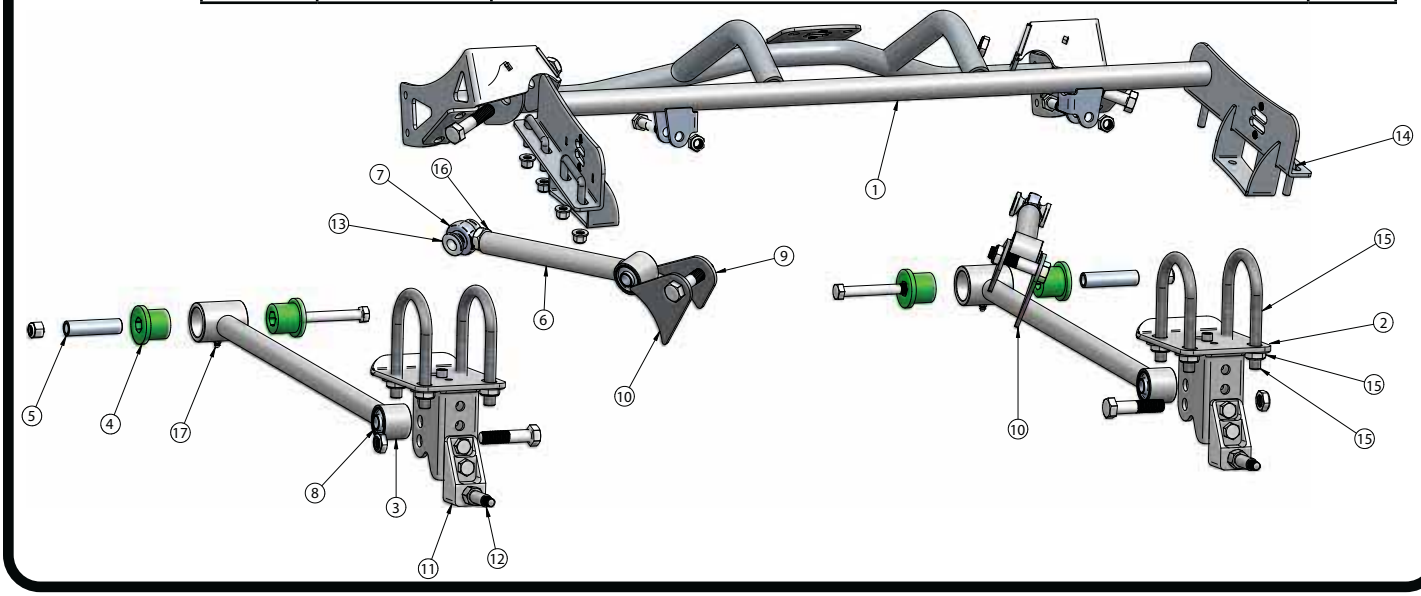

Hardware List .....In the box (Kit# 99010054)

QTY	Part Number	Description
4-Link Bars to Mounts		
6	99621003	5/8"x 2 3/4" Gr. 8 Bolt
6	99622006	5/8" SAE Nylok Jam Nut
Cradle to Car		
14	99372002	3/8-16" Nylok Nut
14	99373003	3/8" SAE Flat washer
6	99373007	3/8"-16 Thread Forming Bolts
Shock Mount to Axle Mount		
2	99501007	1/2"-20 x 1 1/4" Hex Bolt
2	99501009	1/2"-20 x 1 3/4" Hex Bolt
4	99502002	1/2"-20 Nylok Nut
Shock to Cradle		
2	99501010	1/2"-20 x 2 1/4" Hex Bolt
2	99502003	1/2"-20 Thin Nylok Jam Nut
4 Link Bar Assembly		
4	99752004	3/4"-16 RH Jam Nuts
4	99752006	3/4"-16 LH Jam Nuts
2	90002276	Anit-Sieze

QTY	Part Number	Description
U-bolts		
8	99566003	9/16" SAE Flat Washer
8	99566002	9/16"-18 Hex Nut
Front Lower bar to Chassis		
2	99501029	1/2"-20 x 6 1/2" Hex Bolt
2	99501017	1/2"-20 x 4 1/2" Hex Bolt
2	99502002	1/2"-20 Nylok Nut
Bar Setting Jig		
2	99371001	3/8"-16 x 3/4" Hex Bolt
2	99372004	3/8"-16 Hex Nut
Shock Stud		
2	99432002	7/16"-20 Nylok Nut
2	99433002	7/16" SAE flat Washer
2	99623004	5/8" SAE Flat Washer

R-JOINT SPACER INSTALLATION

Install the Spacers by inserting the SMALL side of the SPACER into the Center Pivot Ball. Push them in until they bottom out and stop.

LOWER FRONT R-JOINT

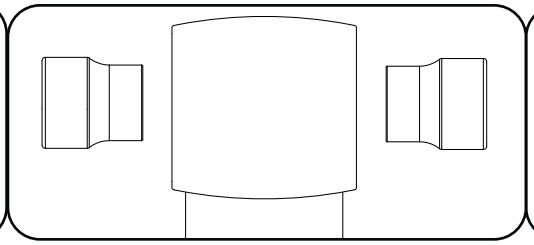

ALL OTHER R-JOINTS

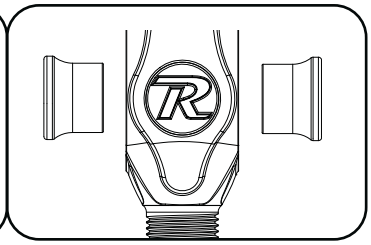

New R-Joints will be quite stiff (75-90 in/lbs breakaway torque) until they "break in" after a few miles of use. After the break in period they will move much more freely. Because the composite bearing race contains self lubricating ingredients, no additional lubrication is needed or desired. Any additional lubrication will only serve to attract more dirt and debris to the R-Joint and actually shorten its life.



SWEDGED AXLE TUBES! - IF YOUR CAR EQUIPPED WITH A DIFFERENTIAL THAT HAS THE ENDS OF THE AXLE TUBES SWEDGED TO 2 1/4", YOU WILL NEED DIFFERENT U-BOLTS. YOU WILL NEED (4) OF RIDETECH PART # 99566009.

Getting Started.....

Congratulations on your purchase of the Ridetech Rear 4-link System. This system has been designed to give your Mustang excellent handling along with a lifetime of enjoyment. Some of the key features of this system: Tune ability, Replaces the Leaf Springs, this allows the 4-Link to locate the rearend and the CoilOvers/ShockWaves to support the car.

Note: These system is designed for use with the Ridetech Shockwaves or CoilOvers. **The factory shocks and springs will not fit this setup.**

1. Raise the vehicle to a safe and comfortable working height. Use jack stands to support the vehicle with the suspension hanging freely.

2. Support the axle and remove the leaf springs, shocks and tail pipes. Refer to the factory service manual for proper disassemble procedures. You might have to detach the fuel line from the frame rails.

Cradle Installation

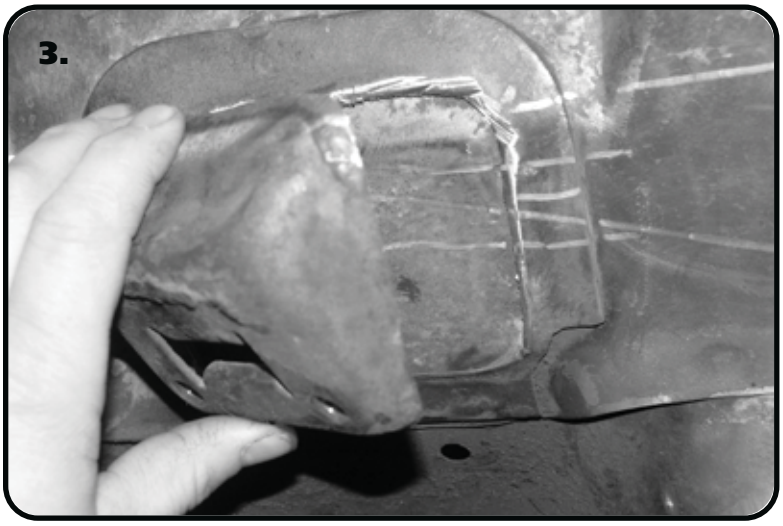

3. Remove the Factory Pinion Snubber and Mount from the car. We use a cut off wheel to remove the mount. Notice that we left the mounting lip of the mount attached to the car. This provides another layer of metal for the Front Tab of the Upper Cradle to attach too.

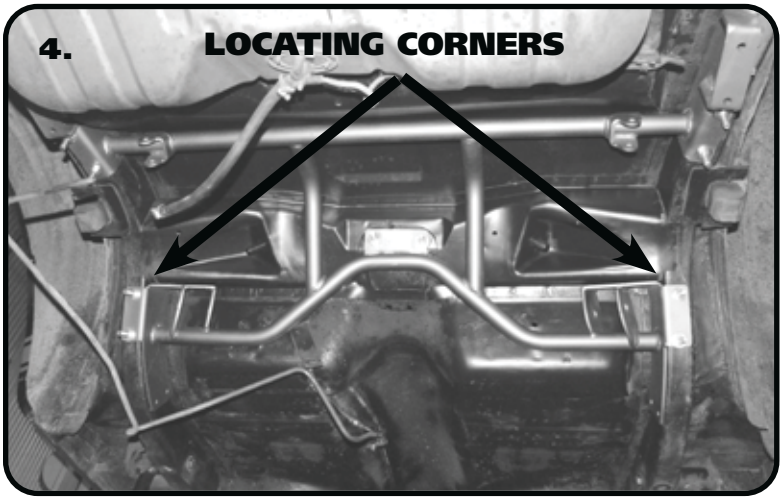

4. Install the cradle into the car. The rear corners of the Upper Bar Mounts locate into the front corner of the factory shock sheet metal mount. The Cradle is held in by (7) 3/8" Square U-bolts. Use the Cradle as a locator for drilling the holes. Drill the holes using a 7/16" drill bit. Drill The front 3 holes on each side with a 5/16" drill bit.

Note: The OEM fuel line will need to be detached from the frame rails until the Cradle is installed.

Lower Axle Mount Installation



5. You will notice that the holes are drilled in pairs. Each pair will receive a Square U-bolt. To insert the Square U-bolts into the holes it may be necessary to lower the Cradle to install them. The U-bolts are installed by inserting one end into one of the drilled holes, using the other end as a handle, feed it through the frame until the inserted end will drop down through the remaining hole. Do this for all (7) U-bolts. Install the Cradle into position. Install (1) 3/8" Flat washer and (1) 3/8" Nylok nut onto each stud sticking through the cradle. Do not tighten them until all Washers and Nuts are installed. Install the 3/8" Thread Forming bolts into the 5/16" holes.

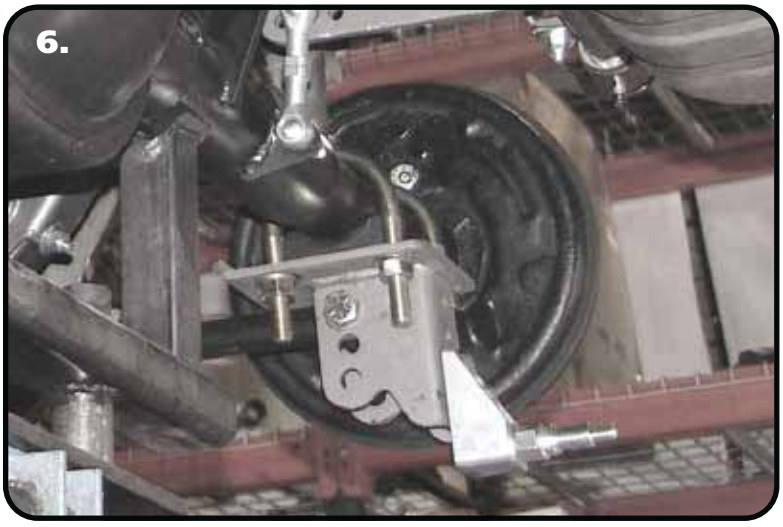

6. Install the Lower Axle Mount onto the Axle using the supplied U-Bolts. Run the nuts down to hold the mount in place, but DO NOT tighten yet.

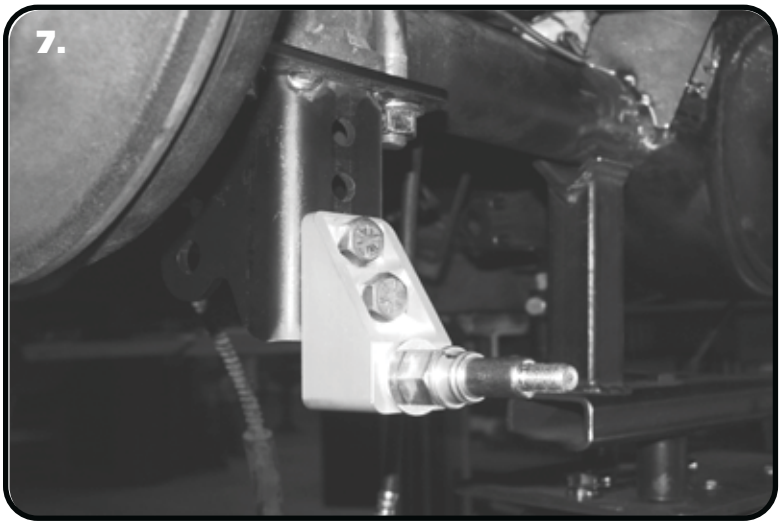

7. Attach the Lower Shock Mount to the Axle Mount using (1) 1/2"-20 x 1 1/4", (1) 1/2"-20 x 1 3/4" Hex Bolts, and (2) 1/2"-20 Nylok Nuts on each mount. The Shock Mount is installed in the BOTTOM 2 holes of the Axle Mount. Install a Shock Stud and 5/8" washer in each Shock Mount. Tighten the mounting hardware and the Shock Stud.

R-Joint Bar Assembly

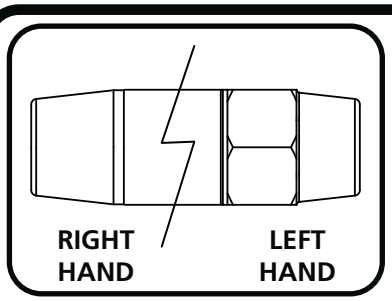



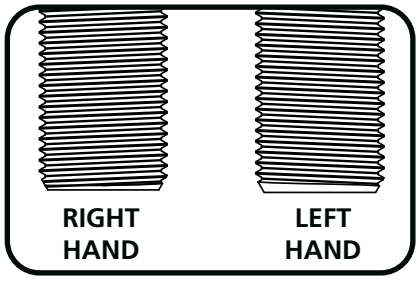

THE 4-LINK BARS, R-JOINTS, AND JAM NUTS HAVE RIGHT HAND AND LEFT HAND THREADS. THIS ALLOWS THE BAR TO BE ADJUSTED WITHOUT REMOVING IT. THE HEX END OF THE BAR IS LEFT HAND THREAD. THE LEFT HAND JAM NUT HAS AN COUNTER-CLOCKWISE ARROW STAMPED INTO IT. IMAGE 3 WILL HELP YOU DETERMINE THE THREADS OF THE R-JOINTS.

14a. Component List:

1. 4-Link Bar
2. Right Hand Thread R-joint
3. Right Hand Thread Jam Nut
4. Left Hand Thread R-Joint
5. Left Hand Thread Jam Nut

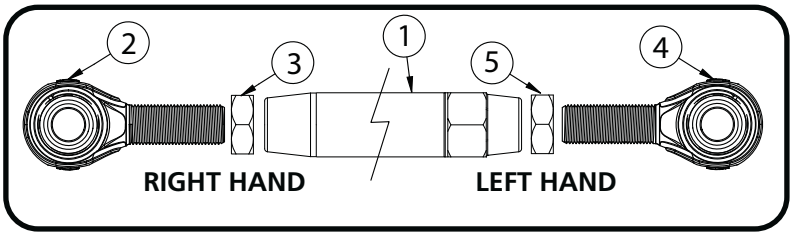

14b. Thread the jam nuts onto the threaded shank of the r-joints. Thread the nuts all the way on to the r-joint.

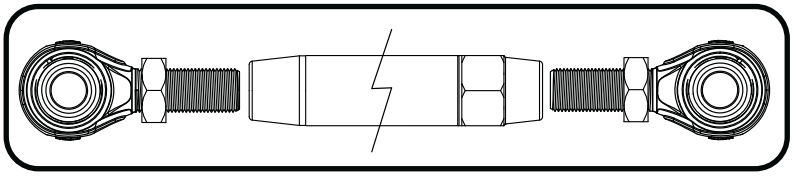

14c. ***Apply anti-seize to the threads of the r-joint.*** This will prevent the threads from galling.



14d. Thread the r-joints into the 4-link bar. Thread them in evenly until you achieve the correct center to center length.
Upper Bar Length: 11 3/4"
Lower Bar Length: 21 3/4"

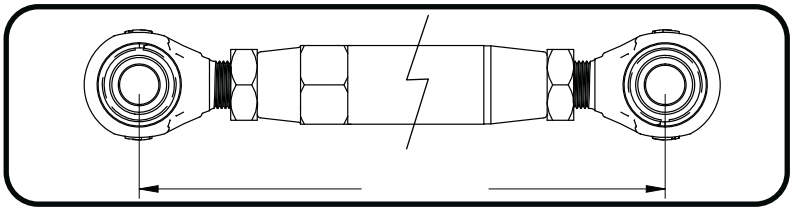

14e. After getting one bar length set, you can put a 5/8" bolt through the r-joints to simplify setting the next bar. Adjust the bar length of the 2nd bar until it will slip on and off the bolts. Torque the jam nuts 65-75 ft-lbs using an 1 1/8" crows foot on a torque wrench.



Setting Pinion Angle

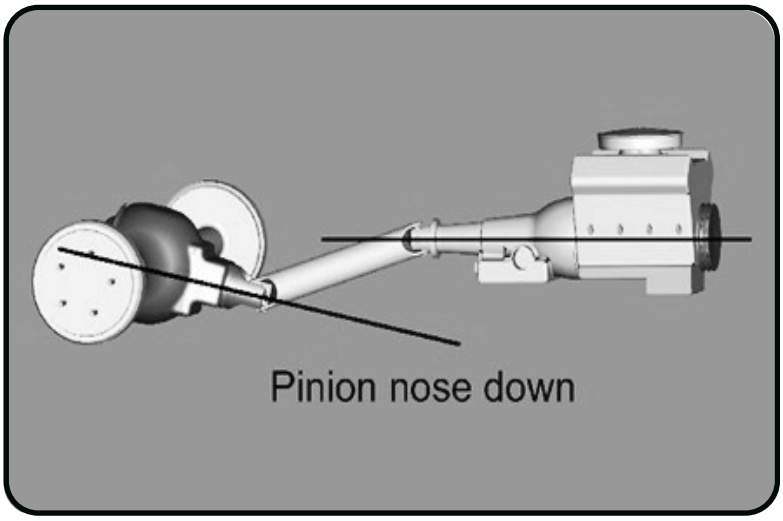

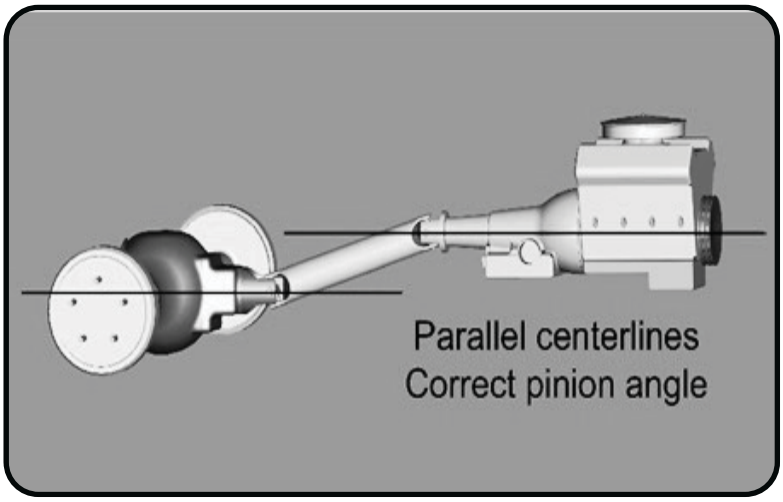

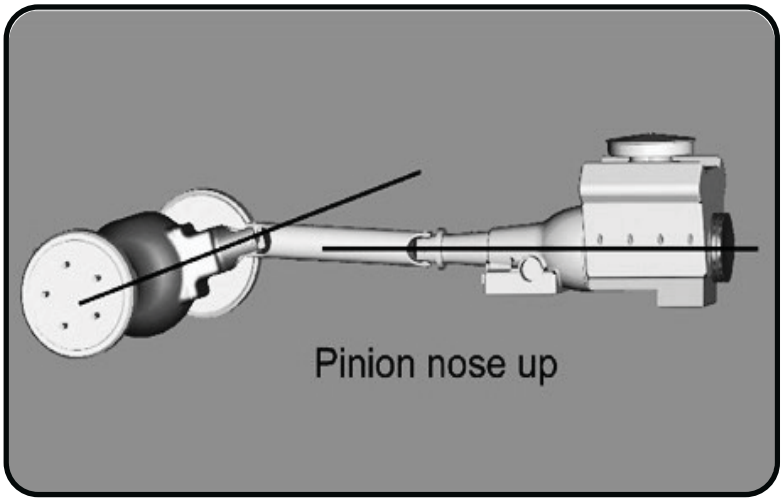

READ PAGES 6-8 ON SETTING PINION ANGLES, UPPER BAR TAB JIG INSTALLATION, & SETTING RIDE HEIGHT.

How do you set the pinion angle? On a single-piece shaft you want to set it up where a line drawn through the center of the engine crankshaft or output shaft of the transmission and a line drawn through the center of the pinion are parallel to each other but not the same line.

Your transmission angle should be around 3 degrees down in the rear. If it is more or less than 3 degrees, you might want to consider changing it. Too little angle on the transmission reduces the amount of oil getting to the rear bushing. Too much transmission angle will increase the working angles of the u-joints which will increase the wear. With the transmission at 3 degrees down in the rear, you will want to set the pinion 3 degrees up in the front.

A simple way to do this is to place a digital angle finder or dial level on the front face of the lower engine pulley or harmonic balancer. This will give you a reading that is 90 degrees to the crank or output shaft unless you have real problems with your balancer. At the other end, you can place the same level or angle finder against the front face of the pinion yoke that is also at 90 degrees to the centerline. If you rotate the yoke up or down so both angles match, you have perfect alignment.

Road testing will tell you if you have it right. If you accelerate and you get or increase a vibration, then the pinion yoke is too HIGH. Rotate it downward in small increments of a degree or two until the problem goes away. If you get or increase a vibration when decelerating, then the pinion yoke is too LOW. Rotate it upward to correct it.

Upper Bar Tab Installation Jig

Upper Bar Installation Jig

- This jig has been supplied to aid in the installation of the upper 4 link bar. It can be temporarily used to properly align, locate and weld the tabs onto the axle. It will also ensure that the mounting bolts are parallel to the ground.
- Follow the diagram below to set the jig to the same length as the upper bar, use the 3/8" x 3/4" bolt and nuts to set the length.
- Position the axle at ride height. Center the axle left to right between the quarter panels. Set pinion angle.
- Bolt one end of the jig to the cradle using a 5/8" x 2 ¾" bolt.
- Using another 5/8" x 2 ¾" bolt, fasten the axle tabs to the other end. The tall tab goes to the outside of the car. The short tab goes to the inside of the car (some cars may need a tall tab on the inside). The tabs must be bolted to the outside of the jig.
- Swing the bar down letting the tabs rest onto the axle. Trim the brackets as necessary to minimize the gap to be welded.
- Check pinion angle, ride height and axle center. Tack-weld the tabs in place.
- Remove jig and install upper bar.
- Repeat this process for the other side.
- Recheck pinion angle, ride height and axle center. (Sound familiar?)
- After the tabs have been tack welded on both sides, remove the upper bars to avoid melting the rubber bushings. Let the axle drop down for better access to the tabs. Lay 1" welds on the inside and outside of the tabs. Skip around from one side to the other to avoid overheating the tube.

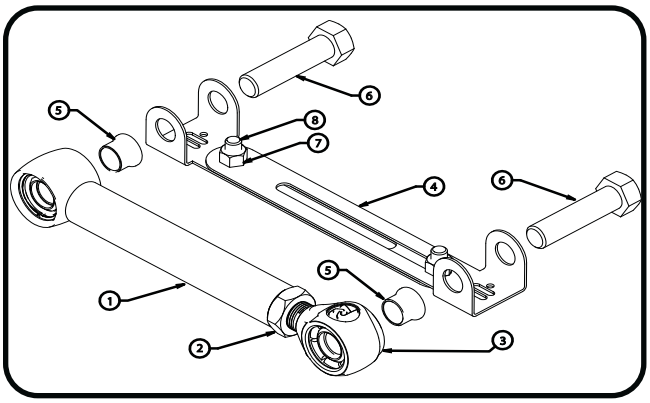



Item#	Description
1	Upper Bar
2	3/4"-16 Jam Nut
3	R-Joint End
4	Alignment Jig
5	Aluminum Spacer
6	5/8" x 2 3/4" Bolt
7	3/8"-16 Nut
8	3/8"-16 x 3/4" Bolt



Installing Lower Bar & Axle Tabs



8. Install the Lower Bars. The Front Lower uses the WIDE(70013539) R-Joint Spacers inserted into the outside of the R-Joint with a NARROW(70013334) inserted on the inside. The Axle end of the bar gets a NARROW(70013334) R-Joint Spacer inserted into each side of the R-Joint. The bar is attached to the Axle Mount in the **TOP HOLE** using (1) 5/8" x 2 3/4" Hex Bolt, and (1) 5/8" Thin Nylok Jam Nut. The front of the Lower Bar is attached with 1/2"x 6" Hex Bolt(64-67) or 1/2"x 4 1/2"Hex Bolt(68-70), and (1) 1/2" Nylok Nut.

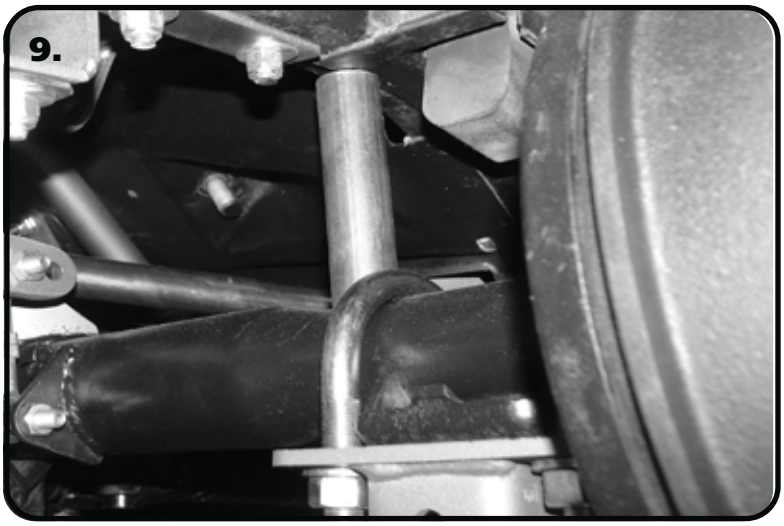

9. One helpful trick to maintain ride height when setting the pinion angle is to put a spacer between the axle and the frame. The spacer should be 4 1/2" tall. Set the pinion Angle and axle center. When measuring the axle center you can measure off of the frame rails. We also use a plum bob off the quarter panels to double check the axle center. Refer to Page 7 on Setting the Pinion Angle.

Note: You can tack weld the spacer in place after you get the Pinion Angle, and Axle Center set. This will ensure that nothing moves through the Upper Tab Installation.

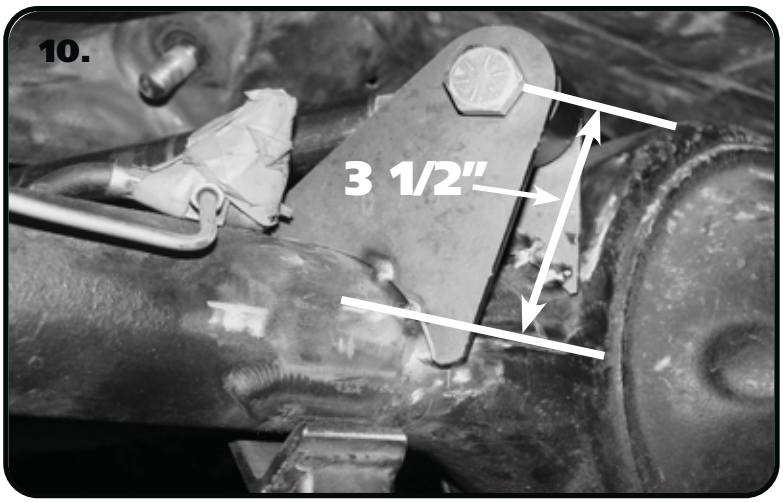

10. Refer to Page 8 and set the length of the Upper Bar Jig and install the Tabs on the Jig. Insert the Jig into the Cradle. Set the Upper Tabs on the Rearend. Due to different variations of the Rearend Housings, it may be necessary to modify the tabs for the best fit. The height you are wanting to achieve with the upper bar end is 3 1/2" from the axle center line. Modify the tabs so that the center of the bar bushing will be 3 1/2" from the center of the axle.

Installing Axle Tabs & Shockwaves/Coilovers

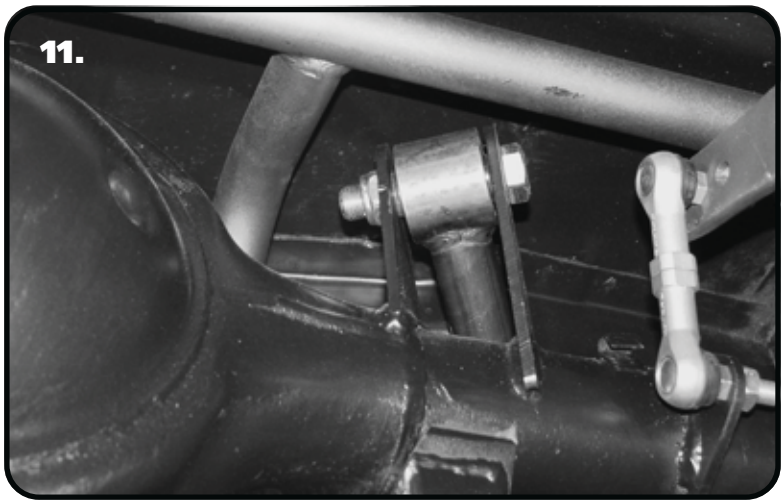

11. Once the bar end height is set, tack weld the tabs to the axle. Do this for the Driver and Passenger side bars. Insert the bars into the Cradle and Tabs to double check fitment. Recheck Axle Center and Pinion Angle. Once satisfied with fitment weld the Upper bar Tabs onto the Axle. Weld 1" at a time, skip around from one side to the other, and one tab to the other to avoid overheating the Axle Tube. When the tabs cool down, insert NARROW(70013334) spacers into each side of the R-Joints of the Upper Bar. Attach the upper bars using (1)5/8" x 2 3/4" Bolt, and (1) 5/8" Thin Nylok Nut.

Remove the Spacer from between the Axle and Frame.

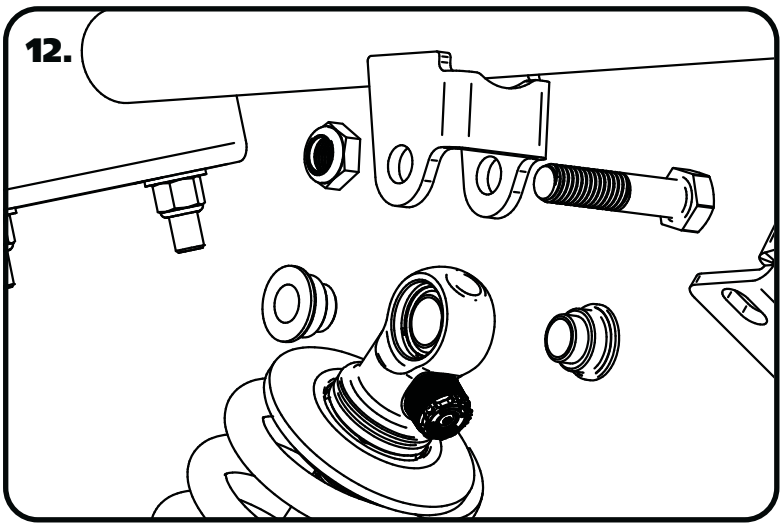

12. Install a 1/2" ID Spacer on each side of the upper Coilover/ShockWave. Slide the assembly into the upper crossmember from the bottom side. If your shock has an adjuster knob position it so that the knob points toward the center of the car. Line up the hole in the spacers with the hole in the upper shock bridge and insert 1/2" x 2 1/2" bolt and install 1/2" Nylok nut.

NOTE: BEFORE INSTALLING SHOCKWAVES
The correct pinion angle must be set first. Failure to do so could result in damage to the ShockWave by the bag rubbing the Lower Axle Mount.

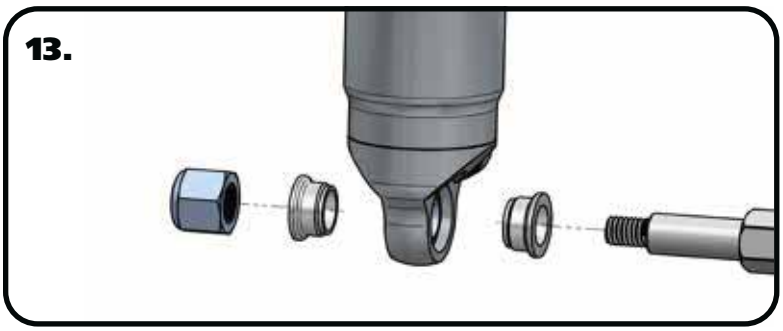

13. Install a 5/8" ID spacer(Small side towards shock body) onto the lower Shock Stud. Slide the bottom of the Shock onto the Stud. Install a second 5/8" ID Spacer onto the Stud(small side towards shock). You may need to jack the rearend up to Slide the Shock onto the Stud. Install the 7/16" Flatwasher and 7/16" Nylok nut. Tighten the upper and lower shock bolts.

Note: If installing Shockwaves and you want to locate the air fitting in a different location, the air spring assembly can be rotated on the shock by grabbing the shock and air spring assembly by hand and spinning the shock in the air spring assembly.

The designed ride height of the CoilOver/Shockwave is 14 1/2" center to center.

ridetech

Installation Instructions

Part # 21150701 - 5.2" Stroke HQ Series Shockwave

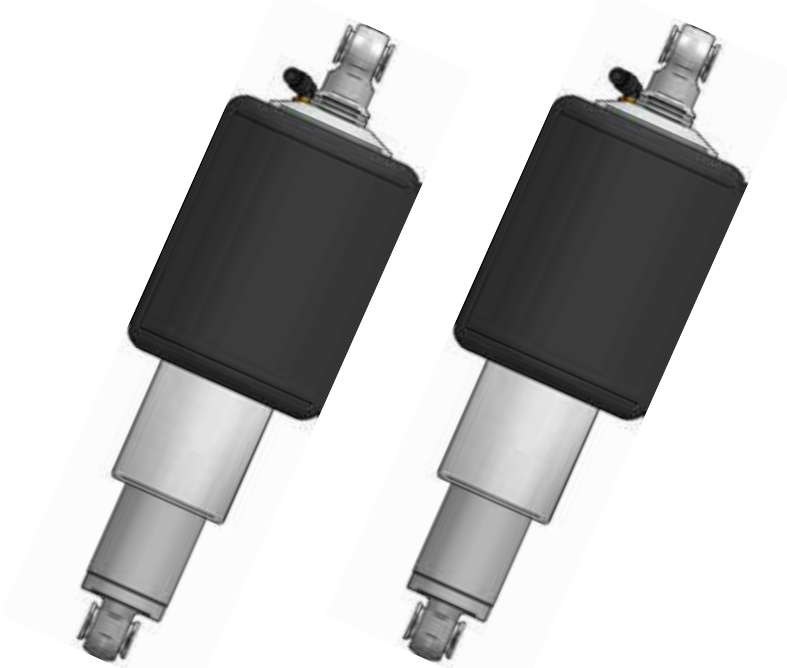

Recommended Tools





7000 Series Bellow, Eye/Eye 5.2" Shock

Installation Instructions

Table of contents

Page 38..... Included Components
Page 39..... Notes and Care of Your Shockwave
Page 40..... Shock Adjustment

ShockWave Dimensions:

Center of bearing to Center of bearing:

Compressed:	11.85"
Ride Height:	14.60"
Extended:	16.42"

www.ridetech.com

812-482-2932

Major Components .....In the box

Item #	Part #	Description	QTY
1	982-10-805	5.2" Stroke HQ Series Shock	2
2	815-05-022	Shock Eyelet	2
3	24090799	7000 Series, 4" Diameter AirSpring	2
4	234-00-153	AirSpring Locking Ring (Installed on Shock)	2
5	90002044	Spacer kit - 1/2" ID and 5/8" ID	4
	90001994	5/8" ID Bearing (installed in shock and eyelet)	4
	90001995	Bearing Snap Ring (installed in shock and eyelet)	8

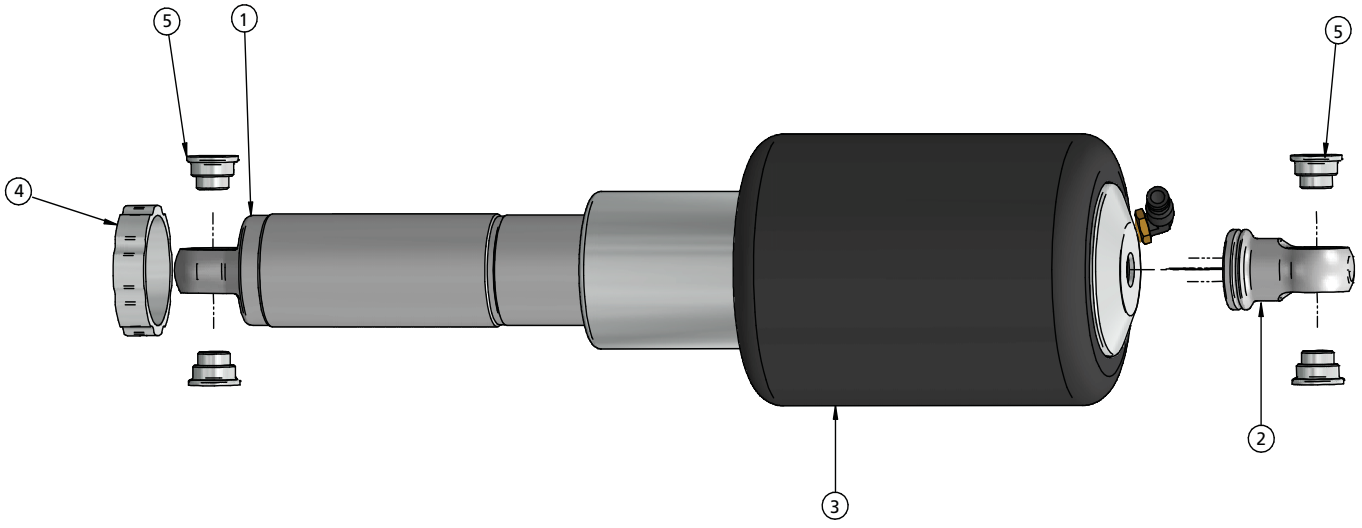

WARNING: ATTEMPTING TO REMOVE THE AIR FITTING WILL DAMAGE IT AND VOID THE WARRANTY.

Notes and Care of your Shockwaves

NOTES:
WARNING: ATTEMPTING TO REMOVE THE AIR FITTING WILL DAMAGE IT AND VOID THE WARRANTY.

TIGHTENING THE TOP 9/16"-18 NUT: SNUG THE NUT DOWN AGAINST THE TOP CAP. YOU NEED TO BE ABLE TO ARTICULATE THE SHOCK BY HAND. WE TORQUE THE NUT TO 80 INLBS USING A 7/8" CROWS FOOT WRENCH ON A TORQUE WRENCH..

You can clock the airfitting location on the ShockWave by turning the AirSpring assembly of the shock. Make sure the fitting doesn't contact the frame.

When cutting the airline, use a razor blade. The cut needs to be a clean cut and square for the airline to seal properly.

The Locking ring on the shock is NOT adjustable. These rings are set at the factory to optimize the AirSpring stroke with the shock stroke.

The care and feeding of your new ShockWaves

1. Although the ShockWave has an internal bumpstop, **DO NOT DRIVE THE VEHICLE DEFLATED RESTING ON THIS BUMPSTOP. DAMAGE WILL RESULT**. The internal bumpstop will be damaged, the shock bushings will be damaged, and the vehicle shock mounting points may be damaged to the point of failure. This is a non warrantable situation.

2. Do not drive the vehicle overinflated or "topped out". Over a period of time the shock valving will be damaged, possibly to the point of failure. This is a non warrantable situation! If you need to raise your vehicle higher that the ShockWave allows, you will need a longer unit.

3. The ShockWave is designed to give a great ride quality and to raise and lower the vehicle. **IT IS NOT MADE TO HOP OR JUMP!** If you want to hop or jump, hydraulics are a better choice. This abuse will result in bent piston rods, broken shock mounts, and destroyed bushings. This is a non warrantable situation.

4. Do not let the ShockWave bellows rub on anything. Failure will result. This is a non warrantable situation.

5. The ShockWave product has been field tested on numerous vehicles as well as subjected to many different stress tests to ensure that there are no leakage or durability problems. Failures have been nearly nonexistent unless abused as described above. If the Shockwave units are installed properly and are not abused, they will last many, many years. ShockWave units that are returned with broken mounts, bent piston rods, destroyed bumpstops or bushings, or abrasions on the bellows will not be warrantied.

Shock Adjustment

Shock Adjustment 101- Single Adjustable

Rebound Adjustment:
How to adjust your new shocks.
The rebound adjustment knob is located on the top of the shock absorber protruding from the eyelet.
You must first begin at the ZERO setting, then set the shock to a medium setting of 12.





-Begin with the shocks adjusted to the ZERO rebound position (full stiff). Do this by rotating the rebound adjuster knob clockwise until it stops.

-Now turn the rebound adjuster knob counter clock wise 12 clicks. This sets the shock at 12. (settings 21-24 are typically too soft for street use).

Take the vehicle for a test drive.





-if you are satisfied with the ride quality, do not do anything, you are set!

-if the ride quality is too soft increase the damping effect by rotating the rebound knob clock wise 3 clicks.

Take the vehicle for another test drive.



-if the vehicle is too soft increase the damping effect by rotating the rebound knob clock wise 3 additional clicks.

-If the vehicle is too stiff rotate the rebound adjustment knob counter clock wise 2 clicks and you are set!

Take the vehicle for another test drive and repeat the above steps until the ride quality is satisfactory.

Note:
One end of the vehicle will likely reach the desired setting before the other end. If this happens stop adjusting the satisfied end and keep adjusting the unsatisfied end until the overall ride quality is satisfactory.