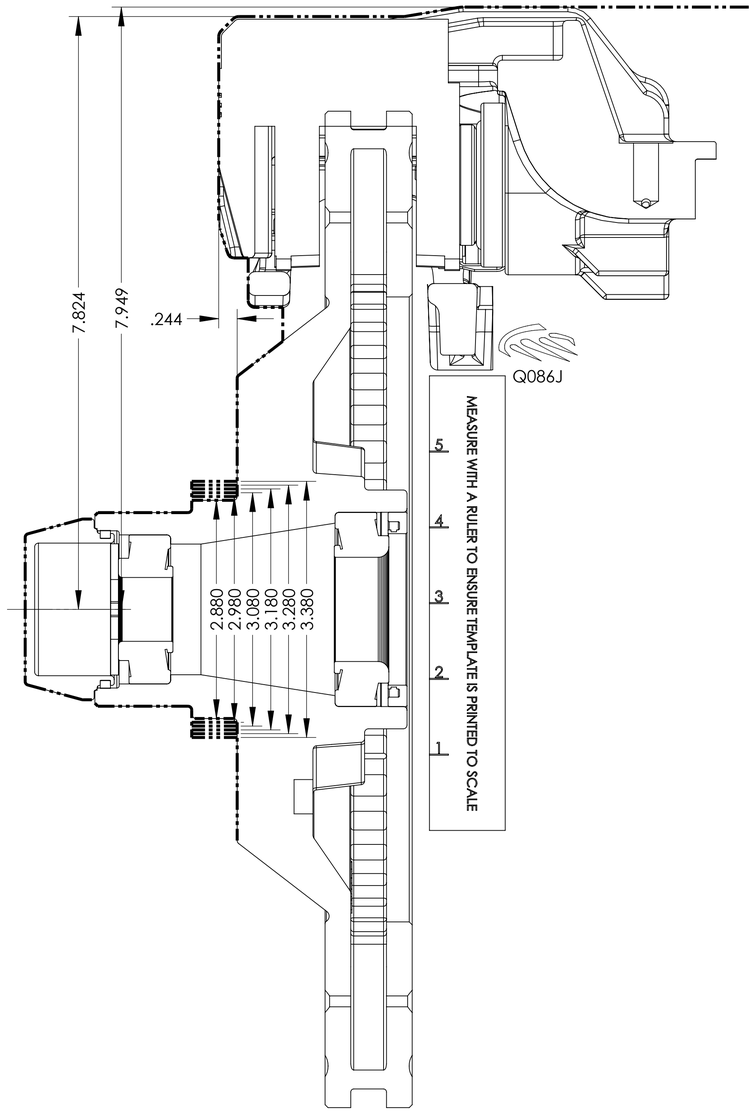

TEMPLATE INSTRUCTIONS:

1. SELECT CUSTOM SCALE OPTION UNDER "PAGE SIZING AND HANDLING" WHEN PRINTING THIS TEMPLATE AND ENTER 100%
2. SELECT PORTRAIT UNDER "ORIENTATION" WHEN PRINTING THIS TEMPLATE
3. MEASURE TO ENSURE TEMPLATE IS PRINTED TO SCALE
4. MEASURE DIAMETER OF WHEEL CENTER HUB
5. ACCURATELY CUT THE TEMPLATE ALONG THE OUTSIDE OF THE DOTTED LINES, USING THE CENTER HUB LINES THAT MOST CLOSELY MATCH YOUR WHEEL'S CENTER HUB OPENING
6. PLACE THE TEMPLATE INSIDE YOUR WHEEL WITH THE CUT EDGE FLAT AGAINST THE MOUNTING SURFACE OF THE WHEEL AND WITH THE CENTER HUB SECTION OF THE TEMPLATE CENTERED IN THE HUB OPENING OF THE WHEEL
7. CHECK FOR CLEARANCE AT ALL POSSIBLE CONTACT POINTS. THERE MUST BE AT LEAST .100 IN. OF CLEARANCE AT ANY POINT
8. IF THERE IS ADEQUATE RADIAL CLEARANCE BUT NOT ENOUGH FACIAL CLEARANCE, PLACE SOMETHING BETWEEN THE WHEEL MOUNT FACE AND THE TEMPLATE TO MIMIC A SPACER. NOTE THE THICKNESS OF THE SPACER USED SO YOU CAN DETERMINE WHICH SPACER(S) TO ORDER FOR YOUR APPLICATION

NOTE THAT THIS TEMPLATE SHOULD BE USED AS A GUIDELINE. WHEELS THAT SHOW MINIMUM CLEARANCE SHOULD BE VERIFIED WITH PHYSICAL BRAKE COMPONENTS WHENEVER POSSIBLE.

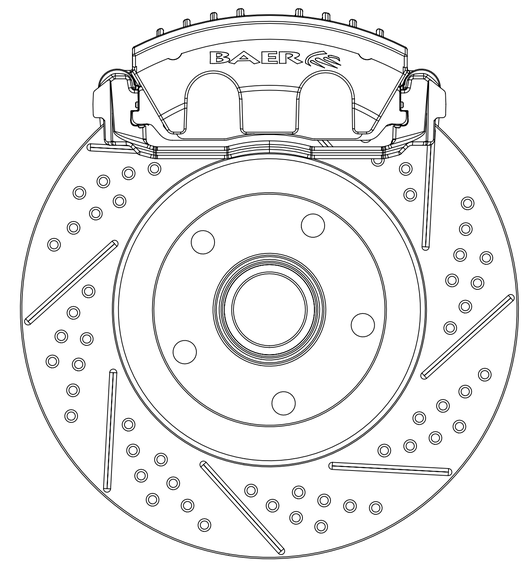

PROPRIETARY AND CONFIDENTIAL
THE INFORMATION CONTAINED IN THIS DRAWING IS THE SOLE PROPERTY OF BAER. ANY REPRODUCTION IN PART OR AS A WHOLE WITHOUT THE WRITTEN PERMISSION OF BAER IS STRICTLY PROHIBITED.

UNLESS OTHERWISE SPECIFIED:
DIMENSIONS ARE IN INCHES
BREAK ALL EDGES .01" X 45°
.XX= +/-.010; .XXX= +/-.005
ANGLES= +/-5°

BAER

2222 W. PEORIA AVE. PHOENIX, AZ 85029

	NAME	DATE	TITLE: **CLS 13.150 1963-1998 C10 AND OBS**		
DRAWN			SIZE **D**	DWG/FILE. NO. CLS 13.150 1963-1998 C10 AND OBS	REV
ENG APPR					
MATERIAL			INTERPRET TOLERANCES PER: ASME Y14.5M	WEIGHT: DO NOT SCALE DRAWING	SHEET 1 OF 1