INSTALLATION INSTRUCTIONS

PART NUMBER: 6000805
VEHICLE MAKE: GM
MODEL: C10/OBS WITH CPP 2.5" DROP OR REACT 2" DROP SPINDLES
YEARS: 1963-1987 C10 & 1988-1998 OBS

PRODUCT: CLS 13.150"
REVISION: REVISION A
REVISION DATE: 4 FEBRUARY, 2025

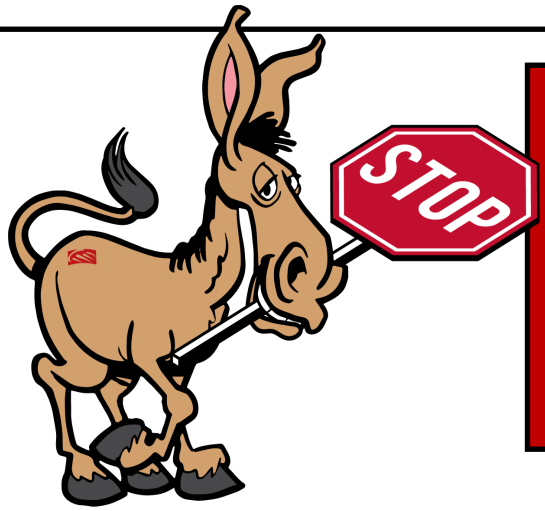

READ BEFORE CONTINUING!
Returns will not be accepted for ANY installed PART or ASSEMBLY. Use great care in preventing cosmetic damage when performing wheel fit check. If a product must be returned, please contact Baer customer service for an RMA number.
The recipient of this product indemnifies Baer Inc. for all liabilities or losses incurred in connection with the recipient modifying or altering Baer Inc. product during installation.

Notices – Read and Follow BEFORE ATTEMPTING INSTALLATION

- All installations require proper safety procedures and protective eyewear.
- All installations assume basic mechanical skill and a factory service manual for the vehicle on which the installation is to be performed.
- All references to the "left" side of the vehicle correlate to the driver's side of the vehicle.
- Any installation requiring you to remove a wheel or gain access under the vehicle requires use of jack stands appropriate to the weight of the vehicle. In all cases, jack stands rated for a minimum of 2-tons is recommended.
- A selection of hand tools sufficient to engage in the installation of these products is assumed and is the responsibility of the installer to have in his/her possession prior to beginning this installation. All installations, which require removal of hydraulic hoses and/or bleeding of the brakes, require appropriate fitting/line wrenches, safety catch can, and protective eyewear. Other than these items, if unique or special tools are required, they will be stated appropriately in the installation step.
- ALWAYS CONFIRM WHEEL FIT BEFORE BEGINNING INSTALLATION OF ANY BRAKE SYSTEM OR "UPSIZED" ROTOR UPGRADE! In addition to checking wheel fitment of this system with the wheel fitment template (available online at www.Baer.com), always place the actual corner assembly or a combination of the caliper assembly on the rotor, and into the actual wheel with great care to prevent cosmetic damage. This procedure will reconfirm proper clearance between the caliper and the wheel before proceeding with the actual installation.
- Returns will **not** be accepted for systems that have been partially or completely installed. **Use extreme care when checking wheel fitment to prevent any cosmetic damage of brake components.** Wheel fitment should be verified before installation using a wheel fitment template specific to your system supplied at www.Baer.com
- When installing new Baer rotor, be sure to follow the direction of rotation indicated on the rotor hat area with either an arrow, an "L" for left, or an "R" for right, or both. "L" always indicates the rotor for the driver side of US spec vehicles. Follow the rotor installation and rotation instructions included in the promo pack (P/N 6020502) included with your system when installing rotors. Failure to properly install rotors will not allow for proper function of the brake system and will cause heat related fatigue and failure.
- A professional wheel alignment is required for any system requiring the replacement of the front spindles or tie rod ends. Follow factory prescribed procedures and specifications unless otherwise indicated.

- **Note: Baer recommends taking photos of the brake system before disassembly and during each step of the disassembly process. Photos may allow technical support to better assist given any necessary troubleshooting.**
- If anything becomes unclear or any parts require force to install at any point during the installation, stop immediately and consult directly with Baer technical staff. Please have these instructions and the part number of the components that is/are proving difficult to install. Please provide technical staff with the make, model, and year (date of vehicle production is preferred) of your vehicle. Baer's technical staff is available by phone (602.233.1411) or email (ContactUs@Baer.com) from 8:30 AM - 5:00 PM MST (Mountain Standard Time) Monday - Friday (Arizona does not observe Daylight Savings Time).

NOTE: This system was designed for CPP 2.5" Nodular Iron C10 Drop Spindles and React 2" OBS Drop Spindles. Both systems are installed on the spindles in a similar manner. This instruction includes installation photos on the React 2" OBS Drop Spindle

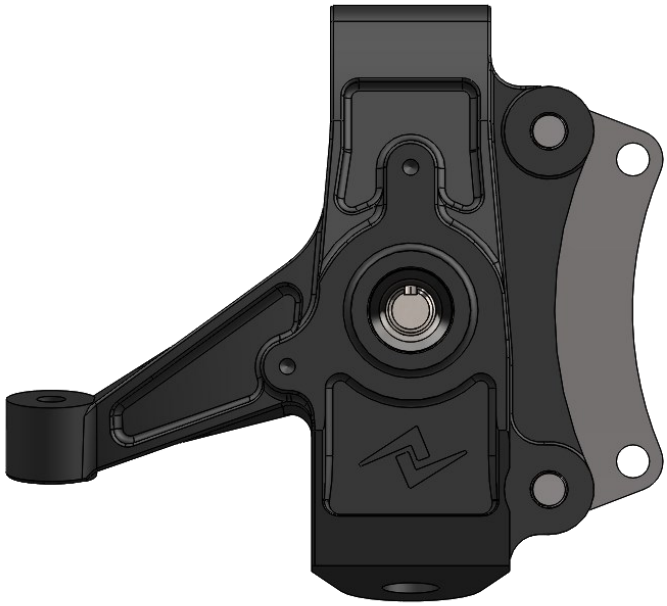

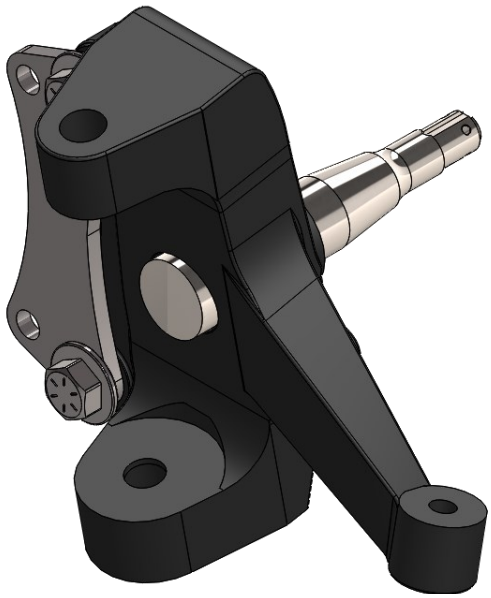

1. Install the supplied base brackets to the knuckle as shown with the supplied 5/8 hex bolts and washers. Torque the hardware to 110 ft-lbs. to secure the base bracket to the knuckle.

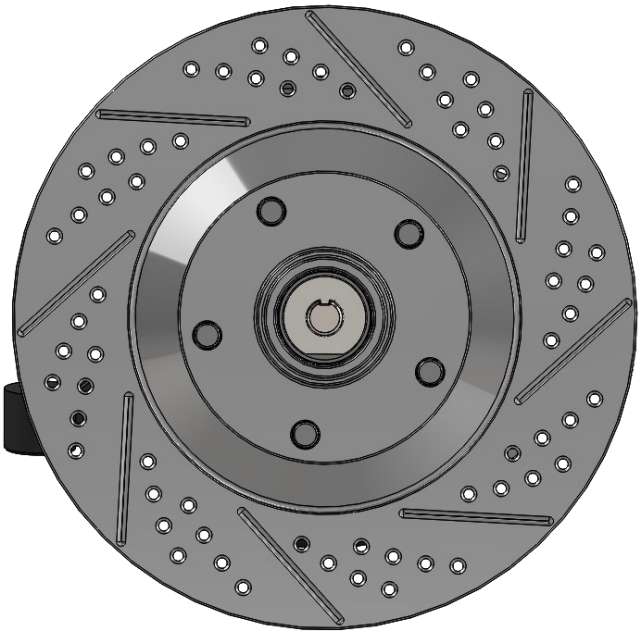

2. Install the correct side rotor, referring to the supplied *"Rotor Installation and Rotation Instructions"* within the promo packet provided with this system. The left side (driver's side) rotor is shown installed on the left (driver's) side spindle in the photo. The rotors for this system come with bearings installed, pre-packed with grease, no additional grease recommended.

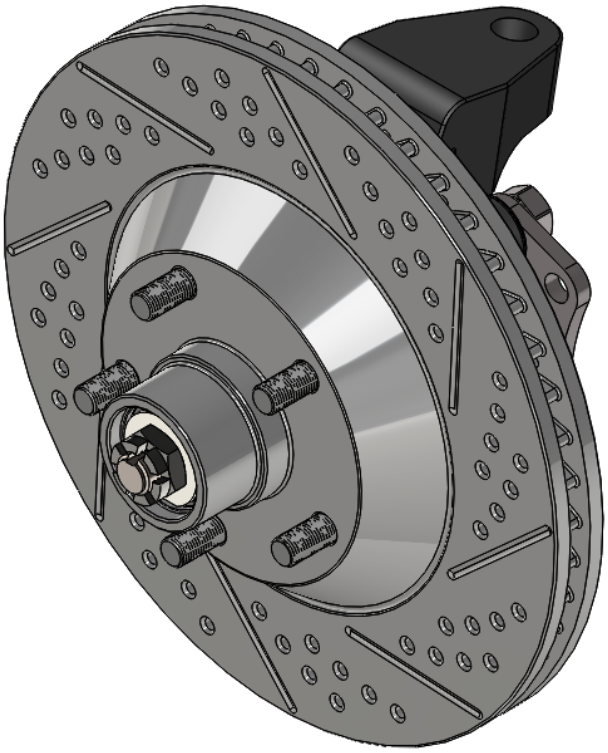

3. Install the supplied castellated nut and torque to 12 ft-lbs. while rotating the rotor. Back the castle nut off one flat and install the supplied cotter pin. If the slot and pin hole do not line up, back off the adjust nut an additional 1/2 flat or less as required. Ensure there is no slack in the rotor hub before installing the cotter pin.

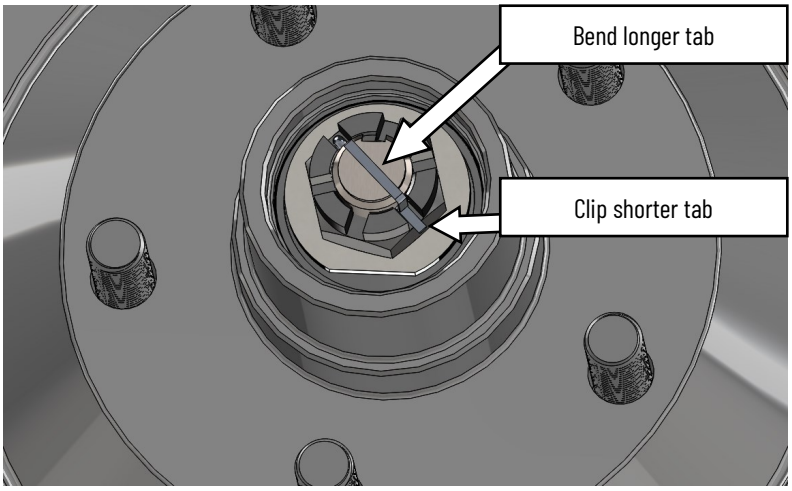

4. Install the supplied cotter pin as shown, bending the longer tab over the end of the spindle pin and clipping the shorter end to secure the castellated nut.

5. Install the supplied dust cap seal into the groove within the billet dust cap. Ensure that the seal is not twisted and sits flat within the groove along the entire diameter. Apply a small amount of silicone based lubricant to the outside of the seal to make an air tight seal when installed in the rotor hub.

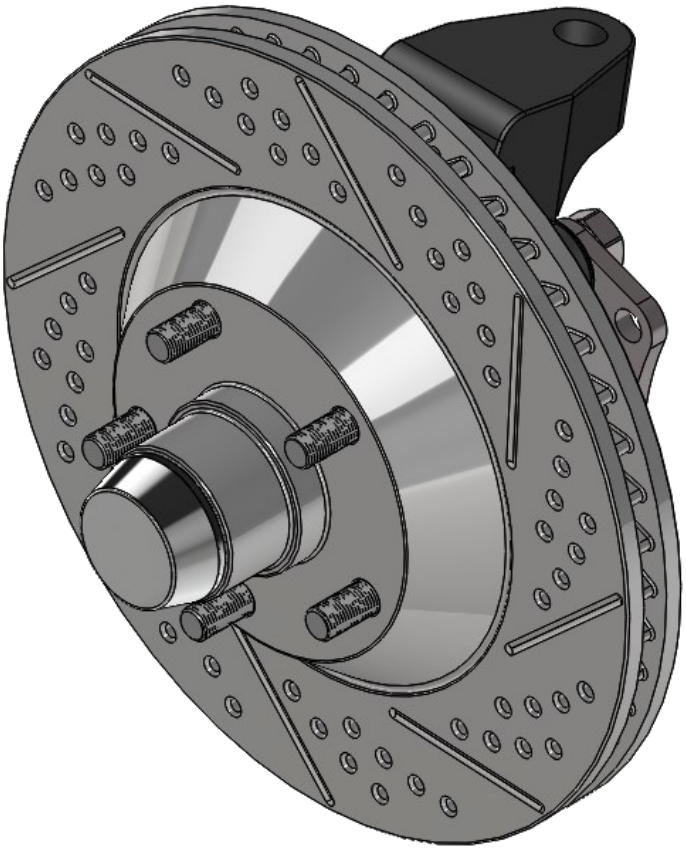

6. Install the dust cap to the rotor hub as shown. Ensure the dust cap seal is not twisted within the groove in the dust cap during installation.

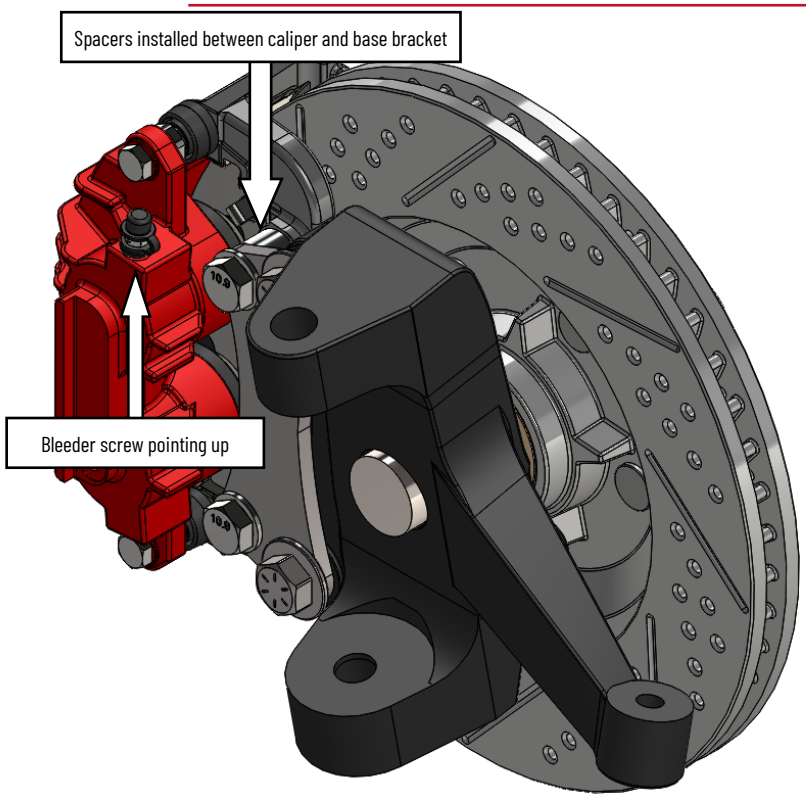

7. Install the correct side caliper assembly with the bleeder screw pointing up. The supplied 0.650" spacers are installed between the caliper assembly and the base bracket and secure in place with the provided M14 hex bolts and washers (one spacer per bolt). Torque the mounting hardware to 105 ft -lbs.

BRAKE HOSE / HARDLINE RETAINER INSTALLATION

All Systems:

1. The hardline must be re-secured with the stainless-steel brake hoses supplied with this system.
2. Connect the new supplied stainless-steel braided brake hose to the caliper with the supplied banjo bolt and new copper crush washers. Install one copper crush washer to each side of the banjo fitting on the hose (2 per caliper). Finger-tighten the banjo bolt.
3. Position the brake hose to avoid interference with the wheel and suspension components through their entire range of motion.
4. Connect the opposite end of the hose with the adapter fitting (if supplied) to the hardline and install the hose lock.
5. Tighten the adapter fitting (if supplied) at the hardline and the banjo bolt connected to the caliper to 15-20 ft-lbs.
6. Repeat steps 1-5 for the other side of the vehicle and re-check all attachment points and fittings.

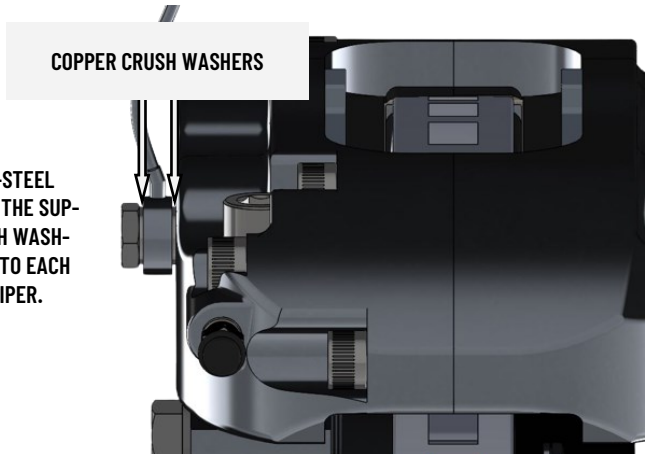

CONNECT THE NEW SUPPLIED STAINLESS-STEEL BRAIDED BRAKE HOSE TO THE CALIPER WITH THE SUPPLIED BANJO BOLT AND NEW COPPER CRUSH WASHERS. INSTALL ONE COPPER CRUSH WASHER TO EACH SIDE OF THE BANJO FITTING ON THE CALIPER.

ENSURE ALL FASTENERS HAVE BEEN TORQUED TO THEIR SPECIFIED VALUES BEFORE OPERATING THE VEHICLE.

Baer recommends using **"Baer Street/Race DOT4 Brake Fluid"** for all Baer brake systems. Refer to Bleeding, Pad Bedding, and Rotor Seasoning Procedures contained within the promo pack (P/N 6020502) provided with this system. For service components and replacement parts, contact a Baer Systems Technical Representative or visit the following link https://baer.com/System-Parts-Tools/.

We at Baer understand there are many options when it comes to performance brake suppliers and appreciate your business. Great pride and care were taken in designing, assembling, and packaging all components of this brake system.
Thank you for your purchase.