Ford 4.6L 1999-2001 DOHC Mustang Cobra/2003-2004 Mach 1

Supercharger System Installation Instructions

1999 MODEL YEAR - *50 State Smog Legal per CARB EO #D-213-17*

2001-2003 MODEL YEAR - *50 State Smog Legal per CARB EO #D-213-20*

**** 2004 Model Year***

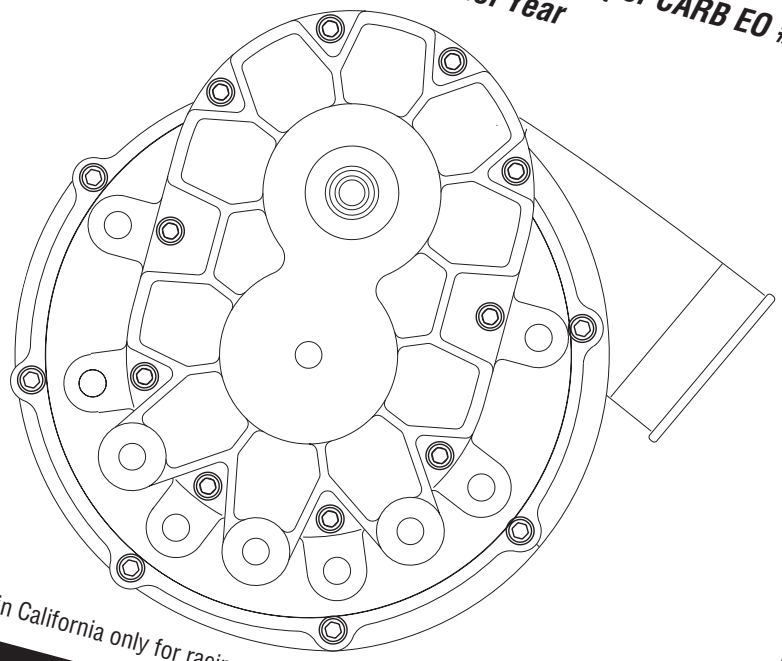

* 2004 Models legal in California only for racing vehicles which may never be used upon a highway.

ENGINEERING, LLC

1650 PACIFIC AVENUE • CHANNEL ISLANDS, CA 93033-9901 • (805) 247-0226

FAX (805) 247-0669 • www.vortechsuperchargers.com • M-F 8:00 AM - 4:30 PM PST

P/N: 4FR020-010

©2004 Vortech Engineering, LLC
All Rights Reserved, Intl. Copr. Secured

23AUG04 86-93 4V Mus. Cobra(4FR v3.1)

FOREWORD

Proper installation of this supercharger kit requires general automotive mechanic knowledge and experience. Please browse through each step of this instruction manual *prior* to beginning the installation to determine if you should refer the job to a professional installer/technician. Please call Vortech Engineering for possible installers in your area.

© 2004 VORTECH ENGINEERING, LLC

All rights reserved. No part of this publication may be reproduced, transmitted, transcribed, or translated into another language in any form, by any means without written permission of Vortech Engineering, LLC.

TABLE OF CONTENTS

FOREWORD ii
TABLE OF CONTENTS iii
IMPORTANT NOTES iv
TOOLS AND SUPPLY REQUIREMENTS v
PARTS LIST - 1999 4.6L DOHC MUSTANG vi
PARTS LIST - 1999 4.6L DOHC MUSTANG w/AFTERCOOLER vii
PARTS LIST - 2001 4.6L DOHC MUSTANG viii
PARTS LIST - 2001 4.6L DOHC MUSTANG w/AFTERCOOLER ix
PARTS LIST - 2003-2004 4.6L DOHC MACH 1 x
PARTS LIST - 2003-2004 4.6L DOHC MACH 1 w/AFTERCOOLER xi
1. PREPARATION/REMOVAL 1
2. OIL DRAIN 2
3. OIL FEED 3
4. FUEL PUMP INSTALLATION 3
5. FUEL INJECTOR REPLACEMENT 4
6. AIR CONDITIONING LINE MODIFICATION 5
7. FAN RESISTOR RELOCATION (2001 Cobra and 2003-2004 Mach 1 Only) 5
8. MAIN BRACKET ASSEMBLY/DRIVE BELT 6
8.1 MAIN BRACKET ASSEMBLY/DRIVE BELT (1999 0nly) 7
8.2 MAIN BRACKET ASSEMBLY/DRIVE BELT (2001 Cobra and 2003-2004 Mach 1 0nly) 11
9. RADIATOR HOSE/WATER TUBE 18
10. AIR INLET 20
11. SUPERCHARGER DISCHARGE 27
12. ECM MODULE INSTALLATION 28
13. FINAL CHECK 29

P/N: 4FR020-010
©2004 Vortech Engineering, LLC
All Rights Reserved, Intl. Copr. Secured
23AUG04 86-93 4V Mus. Cobra(4FR v3.1)

1999-2004 4.6L DOHC Cobra/Mach1 Mustang

IMPORTANT NOTES

This kit requires ECM modification and the installation of a Vortech ECM Module. The modules are made specifically for each individual vehicle with respect to the factory ECM calibration. The ECM must be sent directly to Vortech by the installing customer (the charge for this service with module installation has been included in the purchase price).

- Included in this kit is a prepaid next-day air shipping box and a credit tag for one Vortech ECM Module.
- Simply contact the Vortech Service Department at (805) 247-0226 to request a Return Authorization Number (See ECM Module Credit Tag for more details).
  - Mail the enclosed "ECM Module Credit Tag" (send original tag - no photocopies will be accepted) and ECM to Vortech in the supplied box.
  - Turnaround time will be 1-2 days (each application varies). Vortech will give an estimate at the time of your order.

Your Vortech ECM Module comes with a twelve month limited warranty from the original date of purchase of your supercharger system (see owner's manual for details).

OFF-HIGHWAY USE:

When driving vehicle on non-public roads (off-road applications such as racing/high rpm) Vortech strongly recommends replacing the factory platinum plugs with NGK #4177 or Denso IT20 and reducing the factory spark plug gap down to .032".

This product is protected by state common law, copyright and/or patent. All legal rights therein are reserved. The design, layout, dimensions, geometry, and engineering features shown in this product are the exclusive property of Vortech Engineering, LLC. This product may not be copied or duplicated in whole or part, abstractly or fundamentally, intentionally or fortuitously, nor shall any design, dimension, or other information be incorporated into any product or apparatus without prior written consent of Vortech Engineering, LLC.

P/N: 4FR020-010
©2004 Vortech Engineering, LLC
All Rights Reserved, Intl. Copr. Secured
23AUG04 86-93 4V Mus. Cobra(4FR v3.1)

1999-2004
FORD 4.6L DOHC COBRA/MACH 1 MUSTANG
Installation Instructions

CARB E0 #D-213-17 / CARB E0 #D-213-20 (Except 2004 Models)

Congratulations on selecting the best performing and best backed automotive supercharger available today... the VORTECH® V-2® supercharger!

Before beginning this installation, please read through this entire instruction booklet and the Street Supercharger System Owner's Manual which includes the Limited Warranty Program and the Warranty Registration form.

Vortech supercharger systems are performance improving devices. In most cases, increases in torque of 30 - 35% and horsepower between 35 - 45% can be expected with the boost levels specified by Vortech Engineering. This product is intended for use on healthy, well maintained engines. Installation on a worn-out or damaged engine is not recommended and may result in failure of the engine as well as the supercharger. **Vortech Engineering is not responsible for engine damage.**

Installation on new vehicles will not harm or adversely affect the break-in period so long as factory break-in procedures are followed.

For best performance and continued durability, please take note of the following key points:

1. Use only premium grade fuel 91 octane or higher (R+M/2).
2. The engine must have stock compression ratio.
3. If the engine has been modified in any way, check with Vortech prior to using this product.
4. **Always** listen for any sign of detonation (pinging) and discontinue hard use (no boost) until problem is resolved. Any knocking (detonation) that occurs will cause engine damage. Sustained knocking will lead to engine failure. Vortech Engineering is not responsible for engine damage or failure.
5. Perform an oil and filter change upon completion of this installation and prior to test driving your vehicle. Thereafter, always use a high grade SF rated engine oil or a high quality synthetic oil, and change the oil and filter at least every 3,000 miles. **Never attempt to extend the oil change interval beyond 3,000 miles, regardless of oil manufacturer's claims as potential damage to the supercharger may result.**
6. Before beginning installation, replace all spark plugs that are older than 1 year or 20,000 miles with original heat range plugs as specified by the manufacturer. **Do not use platinum spark plugs unless they are original equipment.** Change spark plugs at least every 40,000 miles and spark plug wires at least every 60,000 miles.

TOOL & SUPPLY REQUIREMENTS:

- Factory Repair Manual
- 3/8" Socket and Drive Set: SAE & Metric
- 1/2" Socket and Drive Set: SAE & Metric
- 3/8" NPT Tap and Handle
- Adjustable Wrench
- Open End Wrenches: 3/8", 7/16", 1/2", 9/16", 15/16"
- Center Punch and a 5/8" Tapered Punch
- Ford Springlock 3/8" Fuel Fitting Disconnect Tool
- 6 Quarts SH/CF Rated Quality Engine Oil
- Oil Filter and Wrench
- Flat #2 Screwdriver
- Phillips #2 Screwdriver
- Heavy Grease
- Silicone Sealer
- Drill Motor
- 1/8", 3/16", 11/32" Drill Bits
- 1/2" Tube Bender
- 3/16" Allen Wrench
- Wire Strippers and Crimpers
- Utility Knife
- Hacksaw/Cut-Off/Bandsaw

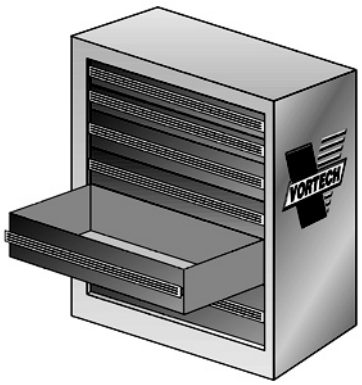

P/N: 4FR020-010
©2004 Vortech Engineering, LLC
All Rights Reserved, Intl. Copr. Secured
23AUG04 86-93 4V Mus. Cobra(4FR v3.1)

1999 4.6L DOHC Mustang

Part No. 4FR218-010SQ

VORTECH ENGINEERING, LLC

PARTS LIST

IMPORTANT: *Before beginning installation, verify that all parts are included in the kit. Report any shortages or damaged parts immediately.*

Part Number	Description	Quantity
2E229-160	**V-2 E-TRIM SUPERCHARGER ASSEMBLY**	**1**
4FR111-021	**'99 MOUNTING BRACKET ASSEMBLY**	**1**
7A375-178	3/8-16 x 1-3/4" HXHD G8	3
7K375-040	3/8" AN960 Flat Washers	5
7K312-001	5/16" AN Washers	9
2A046-113	Belt, K061130-Gates 4.6 4V	1
4FK011-031	Mounting Bracket	1
7J312-875	5/16" Custom Washer	1
7C080-065	8mm x 1.25 x 65 SOC	1
4FK116-021	Idler Pulley Assembly	1
2A017-025	Spacer, Idler 4V	1
7C080-016	8mm x 1.25 x 16 HXHD Bolt	1
7C080-140	8mm x 1.25 x 140 HXHD Bolts	2
7C080-070	8mm x 1.25 x 70 HXHD Bolts	2
7U313-133	M8 x 1.25" 4V Alternator Stud	1
7F008-020	M8 x 1.25 Nut	1
7A375-225	3/8-16 x 2-1/4" HXHD G8	2
7J010-001	#10 Flat Washers	4
7C080-025	8mm x 1.25 x 25 HXHD	2
7C010-050	10-24 x 1/2" SOC HD CAP, ZINC PLT	4
4FK016-081	Water Pump Pulley, Stock	1
4FR010-011	Plaque, '99 4V Mtng Brkt.	1
4FR112-015	**AIR INTAKE ASSY, '01 4V**	**1**
4FR012-010	Inlet Elbow, Mod Cast 4V	1
4FR110-050	90mm MAF Brkt Assy	1
7R002-056	#56 Goldseal Hose Clamp	2
7S350-200	3-1/2 x 2 Sleeve	1
7U035-001	3-1/2" Flex Hose	1
7R002-052	#52 Goldseal Hose Clamp	2
8H040-097	Air filter, 4" Flg 7" Long	1
7A250-075	1/4-20 x 3/4 SHCS Plated	4
7F250-021	1/4-20 Nylock Nut Zinc Plated	4
7U100-052	7/16 Rubber Grommet	1
7U100-056	Vent Tube 90°	1
7R001-008	#8 Stnls Hose Clamp	1
7U100-055	Tie Wrap, 6" Nylon	10
7J250-001	1/4 SAE Washer, Plated	4
7U038-000	3/4" Heater Hose	1
4FK012-040	Air Inlet Elbow 4.6 GEN2	1
7P750-100	3/4 NPT x 1" Hose Fitting	1
7R002-064	#64 Goldseal Hose Clamp	2
7S400-200	4 x 2 Sleeve	1
8A003-040	MAF, 90mm	1
7U375-055	Vacuum Cap, 5/8" Nipple	1
7E010-049	#10 x 3/4 Hex Head Sheet	2
4PFL010-041	Brkt, Tan Resistor Reloc	1
7C010-075	10-24 x 3/4 SHCS GR5 Zinc	2
7F010-024	10-24 Nylock Nut	2
4FR114-010	**COOLANT PIPE ASSEMBLY '99+**	**1**
7U100-046	O-Rings	2
4FE014-010	Radiator Pipe Stnlss	1
7U133-050	1-1/2" x 90° Hose	1
7R002-020	#20 Goldseal Hose Clamps	3
7R002-024	#24 Goldseal Hose Clamps	3
7P375-016	3/8" Pipe Plug	1
70000	Inspector Number	0
4FR014-010	'99 U-Bend Assembly-Coated	1
4FR014-020	'99 L-Bend Assembly-Coated	1
7F006-093	6mm Nylock Nuts	2
4FH130-036	**OIL DRAIN ASSEMBLY**	**1**
7U030-036	1/2" x 14" Oil Drain Hose	1
7R001-008	#8 Stainless Hose Clamps	2
7P500-003	90° 1/2" Alum. Tube	1
7P500-020	Tube Nut	1
7P375-042	Male Connector	1

Part Number	Description	Quantity
4FH130-026	**OIL FEED ASSEMBLY**	**1**
7U030-026	1/4" x 26" Oil Feed Hose	1
7P525-067	.525 Crimp Ferrules	2
7P250-066	#4 Swivel x 1/4" Hose Barb Fitting	2
7P125-103	1/8" NPT -4 x 45° Male Elbow	1
7P250-082	1/4" NPT x -4 90° Fitting	1
7P250-034	1/4 NPT Street TEE	1
7P250-036	-4 Flare to 1/4 NPT	1
4FR112-015	**DISCHARGE ASSEMBLY**	**1**
7S275-300	2-3/4" x 3" Sleeve	1
7R002-044	#44 Goldseal Hose Clamps	2
7R002-016	#16 Hose Goldseal Clamps	4
8D001-001	Bypass Valve	1
7U034-016	1" GS Hose	1
7U034-016	1" GS Hose	1
7U030-046	5/32" Vacuum Line	1
7P156-082	5/32" TEE	1
7S450-200	4-1/2" x 2" Sleeve	1
7R002-072	#72 Goldseal Hose Clamps	2
7P750-100	3/4" NPT x 1" Hose Fitting	1
4FR012-030	Duct Discharge B '99 Cobra	1
7S350-200	3-1/2" x 2" Sleeve	1
7R002-056	#56 Goldseal Hose Clamps	2
4FR012-020	Duct Discharge A - Casting	1
4FR020-020	**ECM CHIP PKG/SHPNG ASSY 99**	**1**
8F060-042	**FUEL INJECTOR 42LB**	**8**
5W001-051	**JUMPER HARNESS**	**8**
8F101-260	**FUEL PUMP**	**1**

P/N: 4FR020-010
©2004 Vortech Engineering, LLC
All Rights Reserved, Intl. Copr. Secured
23AUG04 86-93 4V Mus. Cobra(4FR v3.1)

1999 4.6L DOHC Mustang w/aftercooler

Part No. 4FR218-020SQ

VORTECH ENGINEERING, LLC

PARTS LIST

IMPORTANT: Before beginning installation, verify that all parts are included in the kit. Report any shortages or damaged parts immediately.

Part Number	Description	Quantity
2E229-170	**V-2 SC-TRIM SUPERCHARGER ASSEMBLY**	**1**
4FR111-021	**'99 MOUNTING BRACKET ASSEMBLY**	**1**
7A375-178	3/8-16 x 1-3/4" HXHD G8	3
7K375-040	3/8" AN960 Flat Washers	5
7K312-001	5/16" AN Washers	9
2A046-113	Belt, K061130-Gates 4.6 4V	1
4FK011-031	Mounting Bracket	1
7J312-875	5/16" Custom Washer	1
7C080-065	8mm x 1.25 x 65 SOC	1
4FK116-021	Idler Pulley Assembly	1
2A017-025	Spacer, Idler 4V	1
7C080-016	8mm x 1.25 x 16 HXHD Bolt	1
7C080-140	8mm x 1.25 x 140 HXHD Bolts	2
7C080-070	8mm x 1.25 x 70 HXHD Bolts	2
7U313-133	M8 x 1.25" 4V Alternator Stud	1
7F008-020	M8 x 1.25 Nut	1
7A375-225	3/8-16 x 2-1/4" HXHD G8	2
7J010-001	#10 Flat Washers	4
7C080-025	8mm x 1.25 x 25 HXHD	2
7C010-050	10-24 x 1/2" SOC HD CAP, ZINC PLT	4
4FK016-081	Water Pump Pulley, Stock	1
4FR010-011	Plaque, '99 4V Mtng Brkt.	1
4FR112-015	**AIR INTAKE ASSY, '01 4V**	**1**
4FR012-010	Inlet Elbow, Mod Cast 4V	1
4FR110-050	90mm MAF Brkt Assy	1
7R002-056	#56 Goldseal Hose Clamp	2
7S350-200	3-1/2 x 2 Sleeve	1
7U035-001	3-1/2" Flex Hose	1
7R002-052	#52 Goldseal Hose Clamp	2
8H040-097	Air Filter, 4" Flg 7" Long	1
7A250-075	1/4-20 x 3/4 SHCS Plated	4
7F250-021	1/4-20 Nylock Nut zinc Plated	4
7U100-052	7/16 Rubber Grommet	1
7U100-056	Vent Tube 90°	1
7R001-008	#8 Stnls Hose Clamp	1
7U100-055	Tie Wrap, 6" Nylon	10
7J250-001	1/4 SAE Washer, Plated	4
7U038-000	3/4" Heater Hose	1
4FK012-040	Air Inlet Elbow 4.6 GEN2	1
7P750-100	3/4 NPT x 1" Hose Fitting	1
7R002-064	#64 Goldseal Hose Clamp	2
7S400-200	4 x 2 Sleeve	1
8A003-040	MAF, 90mm	1
7U375-055	Vacuum Cap, 5/8" Nipple	1
7E010-049	#10 x 3/4 Hex Head Sheet	2
4PFL010-041	Brkt, Fan Resistor Reloc	1
7C010-075	10-24 x 3/4 SHCS GR5 Zinc	2
7F010-024	10-24 Nylock Nut	2
4FR114-010	**COOLANT PIPE ASSEMBLY '99+**	**1**
7U100-046	O-Rings	2
4FE014-010	Radiator Pipe Stnlss	1
7U133-050	1-1/2" x 90° Hose	1
7R002-020	#20 Goldseal Hose Clamps	3
7R002-024	#24 Goldseal Hose Clamps	3
7P375-016	3/8" Pipe Plug	1
70000	Inspector Number	0
4FR014-010	'99 U-Bend Assembly-Coated	1
4FR014-020	'99 L-Bend Assembly-Coated	1
7F006-093	6mm Nylock Nuts	2
4FH130-036	**OIL DRAIN ASSEMBLY**	**1**
	(See Parts List For 4FR218-010SQ)	
4FH130-026	**OIL FEED ASSEMBLY**	**1**
	(See Parts List For 4FR218-010SQ)	

Part Number	Description	Quantity
4FR112-030	**DISCHARGE ASSEMBLY '99 4V COOLER**	**1**
7R002-044	#44 Goldseal Hose Clamps	2
7R002-016	#16 Goldseal Hose Clamps	4
8D001-001	Bypass Valve	1
7U034-016	1" GS Hose	0.229'
7U034-016	1" GS Hose	0.312'
7U030-046	5/32" Vacuum Line	4'
7P156-082	5/32" TEE	1
7S450-200	4-1/2" x 2" Sleeve	1
7R002-072	#72 Goldseal Hose Clamps	2
7S275-300	2-3/4" x 3" Sleeve	1
4FR012-030	Duct Discharge B	1
7R002-056	#56 Goldseal Hose Clamp	1
7P500-078	1/2" NPT x 3/4" HOSE Fits	2
7R002-048	#48 Goldseal Hose Clamps	2
7S350-301	Reducer, 3-1/2" to 3"	1
8N101-060	Welded Core Assembly	1
008341	Powercooler Decal	1
8N106-030	**WATER COOLER ASSEMBLY, 4.6**	**1**
7A250-075	1/4-20 X 3/4 SHCS PLTD	4
7F250-021	1/4-20 Nylock Nuts	4
7J250-001	1/4 SAE Washers	8
7P500-026	1/2 NPT-3/4 Barbs 90°	2
8N006-010	Water Cooler	1
7E010-075	#12 x 3/4" Sheet Metal Screw	4
7J010-001	#10 Flat Washers	4
8N010-050	Mount Tabs, Cooler	2
8N107-020	**WATER PUMP ASSEMBLY, 4.6**	**1**
5W001-011	16-14 GA Eyelet .25" Hole	1
5W001-012	Solderless Connector	1
5W018-010	18GA Strd Wire Red	8-1/4'
5W001-019	Solderless Connectors 10-12	2
5W001-014	Fuse Holder 10 GA Wire	1
5W001-015	Fuse, Blade Type 20 amp	1
5W001-015	12-10 GA Female Slide	1
5W001-002	Fuse Tap	1
8N010-060	Bracket, Bosch Water Pump	1
8F001-403	Pump, Water Bosch	1
5W001-050	Connector, Fuel Injector	1
7E010-075	#12 x 3/4" Sheet Metal Screws	2
7J010-001	#10 Flat Washers	2
7U133-060	3/4" x 90° Hose Elbow	1
5W001-024	Mini ATC Fuse Tap	1
5w001-025	Female Slide, Insulated Mini	1
8N105-030	**WATER TANK ASSEMBLY, 4.6**	**1**
7U038-000	3/4" Heater Hose	20
7R007-001	Nylon Clamps 1-1/8"	8
7R003-016	Adel Clamps, 7/8"	3
7E010-075	#12 x 3/4" Sheet Metal Screws	3
7J010-001	#10 Flat Washers	3
7U100-044	Tie Wraps, 4" Nylon	16
7U100-066	Tie Wraps, 11" Nylon	6
8N105-010	Water Tank w/Fitting	1
8N201-060	**PWR COOLR ASSY '99 4.6 4V**	**1**
8N101-060	Welded Core Assy '99 4.6 4V	1
7R002-048	#48 Goldseal Hose Clamp	1
7P500-078	1/2NPT x 3/4 Hose Fit	2
7S350-301	Reducer, 3.50-3.00	1
008341	PowerCooler Decal	1
4FL120-025	**ECM PCK/SHPNG ASSEMBLY '99 4V**	**1**
8F060-042	**FUEL INJECTOR 42LB**	**8**
5W001-051	**JUMPER HARNESS**	**8**
8F101-260	**FUEL PUMP**	**1**

P/N: 4FR020-010
©2004 Vortech Engineering, LLC
All Rights Reserved, Intl. Copr. Secured
23AUG04 86-93 4V Mus. Cobra(4FR v3.1)

2001 4.6L DOHC Mustang

Part No. 4FR218-030SQ

VORTECH ENGINEERING, LLC

PARTS LIST

IMPORTANT: Before beginning installation, verify that all parts are included in the kit. Report any shortages or damaged parts immediately.

Part Number	Description	Quantity
2E229-160	**V-2 E-TRIM SUPERCHARGER ASSEMBLY**	**1**
4FR111-031	**'01 4V MOUNTING BRACKET ASSEMBLY**	**1**
7A375-178	3/8-16 x 1-3/4 HXHD G8	3
7K375-040	3/8 AN960 Flat Washer Plated	6
7K312-001	5/16 AN-Washer	14
4FR011-021	Mach. Mtg Bkt, '01 4V	1
7J312-875	5/16" Washer, Custom	1
7C080-065	8mm x 1.25 x 65 SOC	1
7C080-016	8mm x 1.25 x 16 HXHD	2
7C080-140	8mm x 1.25 x 140 HXHD	2
7C080-070	8mm x 1.25 x 70mm HXHD Zinc	1
7U313-133	M8 x 1.25 Stud, 4V Alternator	1
7F008-020	M8 x 1.25 Nut	1
7A375-225	3/8-16 x 2-1/4 HXHD G8	2
7J010-001	#10 Flat Washer	4
7C080-025	8mm x 1.25 x 25 HXHD	2
7C010-052	10-24 x 1/2 Button Hd. Cap	4
4FR010-011	Plaque, '99 4V Mtng Brkt	1
7C060-075	M6 x 1.0 x 75 HXHD Zink Plated	2
7A375-100	3/8-16 x 1 G5 HXHD Plated	1
7A312-175	5/16-18 x 1-3/4 HXHD G5 Zinc Plated	2
7A312-100	5/16-18 X 1 HXHD GR5P	1
7C080-130	m8 x 1.25 x 130 HXHD Zinc Plated	1
2A017-016	Shrt. Assy. Idler, V-3	1
4FR017-021	Spacer. Alternator '01 4V	2
4FR017-041	Alt Brkt, D-Side '01 4V	1
4FR017-051	Alt Brkt, P-Side, '01 4V	1
4FR111-032	Assy, Idler Plate, '01 4V	1
7J006-093	6mm Washer, Plated	2
2A046-115	Belt, K061115-Gates Vortec	1
4FH016-150	Idler Pulley, 6Rib 3" Flanged	1
4FR017-031	Spacer, Alt/Mtg Brkt, '01 4V	1
4FR112-015	**AIR INTAKE ASSY, '01 4V**	**1**
4FR012-010	Inlet Elbow, Mod Cast 4V	1
4FR110-050	90mm MAF Brkt Assy	1
7R002-056	#56 Goldseal Hose Clamp	2
7S350-200	3-1/2 x 2 Sleeve	1
7U035-001	3-1/2" Flex Hose	1
7R002-052	#52 Goldseal Hose Clamp	2
8H040-097	Air Filter, 4" Flg 7" Long	1
7A250-075	1/4-20 x 3/4 SHCS Plated	4
7F250-021	1/4-20 Nylock Nut Zinc Plated	4
7U100-052	7/16 Rubber Grommet	1
7U100-056	Vent Tube 90°	1
7R001-008	#8 Stnls Hose Clamp	1
7U100-055	Tie Wrap, 6" Nylon	10
7J250-001	1/4 SAE Washer, Plated	4
7U038-000	3/4" Heater Hose	1
4FK012-040	Air Inlet Elbow 4.6 GEN2	1
7P750-100	3/4 NPT x 1" Hose Fitting	1
7R002-064	#64 Goldseal Hose Clamp	2
7S400-200	4 x 2 Sleeve	1
8A003-040	MAF, 90mm	1
7U375-055	Vacuum Cap, 5/8" Nipple	1
7E010-049	#10 x 3/4 Hex Head Sheet	2
4PFL010-041	Brkt, Fan Resistor Reloc	1
7C010-075	10-24 x 3/4 SHCS GR5 Zinc	2
7F010-024	10-24 Nylock Nut	2

Part Number	Description	Quantity
4FR114-010	**COOLANT PIPE ASSY '99+**	**1**
7U100-046	O-Rings	2
4FE014-010	Radiator Pipe Stnlss	1
7U133-050	1-1/2" x 90° Hose	1
7R002-020	#20 Goldseal Hose Clamps	3
7R002-024	#24 Goldseal Hose Clamps	3
7P375-016	3/8" Pipe Plug	1
70000	Inspector Number	0
4FR014-010	'99 U-Bend Assembly-Coated	1
4FR014-020	'99 L-Bend Assembly-Coated	1
7F006-093	6mm Nylock Nuts	2
7P500-020	Tube Nut	1
7P375-042	Male Connector	1
4FH130-036	**OIL DRAIN ASSEMBLY**	**1**
7U030-036	1/2" x 14" Oil Drain Hose	1
7R001-008	#8 Stainless Hose Clamps	2
7P500-003	90° 1/2" Alum. Tube	1
4FH130-026	**OIL FEED ASSEMBLY**	**1**
7U030-026	1/4" x 26" Oil Feed Hose	1
7P525-067	.525 Crimp Ferrules	2
7P250-066	#4 Swivel x 1/4" Hose Barb Fitting	2
7P125-103	1/8" NPT -4 x 45° Male Elbow	1
7P250-082	1/4" NPT x -4 90° Fitting	1
7P250-034	1/4 NPT Street TEE	1
7P250-036	-4 Flare to 1/4 NPT	1
4FR112-020	**DISCHARGE ASSEMBLY**	**1**
7S275-300	2-3/4" x 3" Sleeve	1
7R002-044	#44 Goldseal Hose Clamps	2
7R002-016	#16 Hose Goldseal Clamps	4
8D001-001	Bypass Valve	1
7U034-016	1" GS Hose	1
7U034-016	1" GS Hose	1
7U030-046	5/32" Vacuum Line	1
7P156-082	5/32" TEE	1
7S450-200	4-1/2" x 2" Sleeve	1
7R002-072	#72 Goldseal Hose Clamps	2
7P750-100	3/4" NPT x 1" Hose Fitting	1
4FR012-030	Duct Discharge B '99 Cobra	1
7S350-200	3-1/2" x 2" Sleeve	1
7R002-056	#56 Goldseal Hose Clamps	2
4FR012-020	Duct Discharge A - Casting	1
4FR020-025	**ECM CHIP PKG/SHPNG ASSY '01**	**1**
5W001-051	**JUMPER HARNESS**	**8**
8F101-260	**FUEL PUMP**	**1**
8F060-042	**FUEL INJECTOR 42 lb.**	**8**

P/N: 4FR020-010
©2004 Vortech Engineering, LLC
All Rights Reserved, Intl. Copr. Secured
23AUG04 86-93 4V Mus. Cobra(4FR v3.1)

2001 4.6L DOHC Mustang w/aftercooler

Part No. 4FR218-040SQ

VORTECH ENGINEERING, LLC

PARTS LIST

IMPORTANT: Before beginning installation, verify that all parts are included in the kit. Report any shortages or damaged parts immediately.

Part Number	Description	Quantity
2E229-170	**V-2 SC-TRIM SUPERCHARGER ASSEMBLY**	**1**
4FR111-031	**'01 4V MOUNTING BRACKET ASSEMBLY**	**1**
7A375-178	3/8-16 x 1-3/4 HXHD G8	3
7K375-040	3/8 AN960 Flat Washer Plated	6
7K312-001	5/16 AN-Washer	14
4FR011-021	Mach. Mtg bkt, '01 4V	1
7J312-875	5/16" Washer, Custom	1
7C080-065	8mm x 1.25 x 65 SOC	1
7C080-016	8mm x 1.25 x 16 HXHD	2
7C080-140	8mm x 1.25 x 140 HXHD	2
7C080-070	8mm x 1.25 x 70mm HXHD zinc	1
7U313-133	M8 x 1.25 Stud, 4V Alternator	1
7F008-020	M8 x 1.25 Nut	1
7A375-225	3/8-16 x 2-1/4 HXHD G8	2
7J010-001	#10 Flat Washer	4
7C080-025	8mm x 1.25 x 25 HXHD	2
7C010-052	10-24 x 1/2 Button Hd. Cap	4
4fr010-011	Plaque, '99 4V Mtng Brkt	1
7C060-075	M6 x 1.0 x 75 HXHD Zing Plated	2
7A375-100	3/8-16 x 1 G5 HXHD Plated	1
7A312-175	5/16-18 x 1-3/4 HXHD G5 Zinc Plated	2
7A312-100	5/16-18 X 1 HXHD GR5P	1
7C080-130	m8 x 1.25 x 130 HXHD zinc Plated	1
2A017-016	Shrt. Assy. Idler, V-3	1
4FR017-021	Spacer. Alternator '01 4V	2
4FR017-041	Alt Brkt, D-Side '01 4V	1
4FR017-051	Alt Brkt, P-Side, '01 4V	1
4FR111-032	Assy, Idler Plate, '01 4V	1
7J006-093	6mm Washer, Plated	2
2A046-115	Belt, k061115-gates Vortec	1
4FH016-150	Idler Pulley, 6Rib 3" Flanged	1
4FR017-031	Spacer, Alt/Mtg Brkt, '01 4V	1
4FR112-015	**AIR INTAKE ASSY, '01 4V**	**1**
4FR012-010	Inlet Elbow, Mod Cast 4V	1
4FR110-050	90mm MAF Brkt Assy	1
7R002-056	#56 Goldseal Hose Clamp	2
7S350-200	3-1/2 x 2 Sleeve	1
7U035-001	3-1/2" Flex Hose	1
7R002-052	#52 Goldseal Hose Clamp	2
8H040-097	Air Filter, 4" Flg 7" Long	1
7A250-075	1/4-20 x 3/4 SHCS Plated	4
7F250-021	1/4-20 nylock nut zinc Plated	4
7U100-052	7/16 Rubber Grommet	1
7U100-056	Vent Tube 90°	1
7R001-008	#8 stnls Hose Clamp	1
7U100-055	Tie Wrap, 6" Nylon	10
7J250-001	1/4 SAE Washer, Plated	4
7U038-000	3/4" Heater Hose	1
4FK012-040	Air Inlet Elbow 4.6 GEN2	1
7P750-100	3/4 NPT x 1" Hose Fitting	1
7R002-064	#64 Goldseal Hose Clamp	2
7S400-200	4 x 2 Sleeve	1
8A003-040	MAF, 90mm	1
7U375-055	Vacuum Cap, 5/8" Nipple	1
7E010-049	#10 x 3/4 Hex Head Sheet	2
4PFL010-041	Brkt, Fan Resistor Reloc	1
7C010-075	10-24 x 3/4 SHCS GR5 Zinc	2
7F010-024	10-24 Nylock Nut	2
4FR114-012	**COOLANT PIPE ASSEMBLY '99+**	**1**
7U100-046	O-Rings	2
4FE014-010	Radiator Pipe Stnlss	1
7U133-050	1-1/2" x 90° Hose	1
7R002-020	#20 Goldseal Hose Clamps	3
7R002-024	#24 Goldseal Hose Clamps	3
7P375-002	3/8" Pipe Plug	1
70000	Inspector Number	0
4FR014-012	U-Bend Assembly-Coated	1
7J250-001	1/4" Washer	2
4FR017-061	Spacer, Rad Pipe, '03 Mach 1	2
4FR014-020	'99 L-Bend Assembly-Coated	1
7F006-093	6mm Nylock Nuts	2
4FH130-036	**OIL DRAIN ASSEMBLY** *(See Parts List For 4FR218-010SQ)*	**1**
4FH130-026	**OIL FEED ASSEMBLY** *(See Parts List For 4FR218-010SQ)*	**1**
4FR112-030	**DISCHARGE ASSEMBLY '99 4V COOLER**	**1**
7R002-044	#44 Goldseal Hose Clamps	2
7R002-016	#16 Goldseal Hose Clamps	4
8D001-001	Bypass Valve	1
7U034-016	1" GS Hose	0.229'
7U034-016	1" GS Hose	0.312'
7U030-046	5/32" Vacuum Line	4'
7P156-082	5/32" TEE	1
7S450-200	4-1/2" x 2" Sleeve	1
7R002-072	#72 Goldseal Hose Clamps	2
7S275-300	2-3/4" x 3" Sleeve	1
4FR012-030	Duct Discharge B	1
7R002-056	#56 Goldseal Hose Clamp	1
7P500-078	1/2" NPT x 3/4" HOSE Fits	2
7R002-048	#48 Goldseal Hose Clamps	2
7S350-301	Reducer, 3-1/2" to 3"	1
8N101-060	Welded Core Assembly	1
008341	Powercooler Decal	1
8N106-030	**WATER COOLER ASSEMBLY, 4.6**	**1**
7A250-075	1/4-20 x 3/4 SHCS PLTD	4
7F250-021	1/4-20 Nylock Nuts	4
7J250-001	1/4 SAE Washers	8
7P500-026	1/2 NPT-3/4 Barbs 90°	2
8N006-010	Water Cooler	1
7E010-075	#12 x 3/4" Sheet Metal Screw	4
7J010-001	#10 Flat Washers	4
8N010-050	Mount Tabs, Cooler	2
8N107-020	**WATER PUMP ASSEMBLY, 4.6**	**1**
5W001-011	16-14 GA Eyelet .25" Hole	1
5W001-012	Solderless Connector	1
5W018-010	18GA Strd Wire Red	8-1/4'
5W001-019	Solderless Connectors 10-12	2
5W001-014	Fuse Holder 10 GA Wire	1
5W001-015	Fuse, Blade Type 20 amp	1
5W001-015	12-10 GA Female Slide	1
5W001-002	Fuse Tap	1
8N010-060	Bracket, Bosch Water Pump	1
8F001-403	Pump, Water Bosch	1
5W001-050	Connector, Fuel Injector	1
7E010-075	#12 x 3/4" Sheet Metal Screws	2
7J010-001	#10 Flat Washers	2
7U133-060	3/4" x 90° Hose Elbow	1
5W001-024	Mini ATC Fuse Tap	1
5w001-025	Female Slide, Insulated Mini	1
8N105-030	**WATER TANK ASSEMBLY, 4.6**	**1**
7U038-000	3/4" Heater Hose	20
7R007-001	Nylon Clamps 1-1/8"	8
7R003-016	Adel Clamps, 7/8"	3
7E010-075	#12 x 3/4" Sheet Metal Screws	3
7J010-001	#10 Flat Washers	3
7U100-044	Tie Wraps, 4" Nylon	16
7U100-066	Tie Wraps, 11" Nylon	6
8N105-010	Water Tank w/Fitting	1
8N201-060	**PWR COOLR ASSY '99 4.6 4V**	**1**
8N101-060	Welded Core Assy '99 4.6 4V	1
7R002-048	#48 Goldseal Hose Clamp	1
7P500-078	1/2NPT x 3/4 Hose Fit	2
7S350-301	Reducer, 3.50-3.00	1
008341	PowerCooler Decal	1
4FR020-025	**ECM PCK/SHPNG ASSEMBLY '01**	**1**
8F060-042	**FUEL INJECTOR 42 lb.**	**8**
5W001-051	**JUMPER HARNESS**	**8**
8F101-260	**FUEL PUMP**	**1**

P/N: 4FR020-010
©2004 Vortech Engineering, LLC
All Rights Reserved, Intl. Copr. Secured
23AUG04 86-93 4V Mus. Cobra(4FR v3.1)

2003-2004 4.6L DOHC Mach 1 Mustang

Part No. 4FR218-080SQ

VORTECH ENGINEERING, LLC

PARTS LIST

IMPORTANT: Before beginning installation, verify that all parts are included in the kit. Report any shortages or damaged parts immediately.

Part Number	Description	Quantity
4FR111-041	**'03 MACH 1 MNTG BRACKET ASSEMBLY**	**1**
7A375-178	3/8-16 x 1-3/4 HXHD G8	3
7K375-040	3/8 AN960 Flat Washer Plated	6
7K312-001	5/16 AN-Washer	14
4FR011-021	Mach. Mtg Bkt, '01 4V	1
7J312-875	5/16" Washer, Custom	1
7C080-065	8mm x 1.25 x 65 SOC	1
7C080-016	8mm x 1.25 x 16 HXHD	2
7C080-140	8mm x 1.25 x 140 HXHD	2
7C080-070	8mm x 1.25 x 70mm HXHD Zinc	1
7U313-133	M8 x 1.25 Stud, 4V Alternator	1
7F008-020	M8 x 1.25 Nut	1
7A375-225	3/8-16 x 2-1/4 HXHD G8	2
7J010-001	#10 Flat Washer	4
7C080-025	8mm x 1.25 x 25 HXHD	2
7C010-052	10-24 x 1/2 Button Hd. Cap	4
4FR010-011	Plaque, '99 4V Mtng Brkt	1
7C060-075	M6 x 1.0 x 75 HXHD Zink Plated	2
7A375-100	3/8-16 x 1 G5 HXHD Plated	1
7A312-175	5/16-18 x 1-3/4 HXHD G5 Zinc Plated	2
7A312-100	5/16-18 X 1 HXHD GR5P	1
7C080-130	M8 x 1.25 x 130 HXHD Zinc Plated	1
2A017-016	Shrt. Assy. Idler, V-3	1
4FR017-021	Spacer. Alternator '01 4V	2
4FR017-041	Alt Brkt, D-Side '01 4V	1
4FR017-051	Alt Brkt, P-Side, '01 4V	1
4FR111-032	Assy, Idler Plate, '01 4V	1
7J006-093	6mm Washer, Plated	2
2A046-115	Belt, K061115-Gates Vortec	1
4FH016-150	Idler Pulley, 6Rib 3" Flanged	1
4FR017-031	Spacer, Alt/Mtg Brkt, '01 4V	1
4FR112-017	**AIR INTAKE ASSY, '03 MACH 1**	**1**
4FR012-010	Inlet Elbow, Mod Cast 4V	1
4FR110-050	90mm MAF Brkt Assy	1
7R002-056	#56 Goldseal Hose Clamp	2
7S350-200	3-1/2 x 2 Sleeve	1
7U035-001	3-1/2" Flex Hose	1
7R002-052	#52 Goldseal Hose Clamp	2
8H040-097	Air Filter, 4" Flg 7" Long	1
7A250-075	1/4-20 x 3/4 SHCS Plated	4
7F250-021	1/4-20 Nylock Nut Zinc Plated	4
7U100-052	7/16 Rubber Grommet	1
7U100-056	Vent Tube 90°	1
7R001-008	#8 Stnls Hose Clamp	1
7U100-055	Tie Wrap, 6" Nylon	10
7J250-001	1/4 SAE Washer, Plated	4
7U038-000	3/4" Heater Hose	1
4FK012-040	Air Inlet Elbow 4.6 GEN2	1
7P750-100	3/4 NPT x 1" Hose Fitting	1
7R002-064	#64 Goldseal Hose Clamp	2
7S400-200	4 x 2 Sleeve	1
8A003-040	MAF, 90mm	1
7U375-055	Vacuum Cap, 5/8" Nipple	1
7E010-049	#10 x 3/4 Hex Head Sheet	2
4PFL010-041	Brkt, Fan Resistor Reloc	1
7C010-075	10-24 x 3/4 SHCS GR5 Zinc	2
7F010-024	10-24 Nylock Nut	2
5A002-014	Sensor, Ford Intake Air Temp	1
5W001-063	Harness, Ford IAT Sensor	1
4FR014-050	PCV Tube, 03 Mach 1	1
7P375-106	PCV Valve, Ford, 3/8" Hose	1
7P625-375	Reducer, 5/8" Barb to 3/8" Barb	1
7U032-016	3/8" EFI Fuel Hose Hi-Pressure	.1666'
7U033-010R	Hose, 5/8" ID Fuel, P/Str Ret	2"
7U033-010R	Hose, 5/8" ID Fuel, P/Str Ret	2"
7R001-006	#6 Stnls Hose Clamp, Carrow	2
7J250-001	1/4" Washer, SAE, Pltd	6
7A250-074	1/4"-20 x .75" HHCS Pltd	3
7F250-021	1/4"-20 Nylock Nut Zinc Pltd	3
4FR010-030	Shaker Bracket, P.Side 03 Mach 1	1
4FR010-040	Shaker Bracket, D.Side 03 Mach 1	1
4FR010-040R	Shaker Bracket, D.Side 03 Mach 1,L	1

Part Number	Description	Quantity
4FR114-012	**COOLANT PIPE ASSY '99+**	**1**
7U100-046	O-Rings	2
4FE014-010	Radiator Pipe Stnlss	1
7U133-050	1-1/2" x 90° Hose	1
7R002-020	#20 Goldseal Hose Clamps	3
7R002-024	#24 Goldseal Hose Clamps	3
7P375-016	3/8" Pipe Plug	1
70000	Inspector Number	0
4FR014-010	'99 U-Bend Assembly-Coated	1
4FR014-020	'99 L-Bend Assembly-Coated	1
7F006-093	6mm Nylock Nuts	2
7P500-020	Tube Nut	1
7P375-042	Male Connector	1
4FH130-036	**OIL DRAIN ASSEMBLY**	**1**
7U030-036	1/2" x 14" Oil Drain Hose	1
7R001-008	#8 Stainless Hose Clamps	2
7P500-003	90° 1/2" Alum. Tube	1
4FH130-026	**OIL FEED ASSEMBLY**	**1**
7U030-026	1/4" x 26" Oil Feed Hose	1
7P525-067	.525 Crimp Ferrules	2
7P250-066	#4 Swivel x 1/4" Hose Barb Fitting	2
7P125-103	1/8" NPT -4 x 45° Male Elbow	1
7P250-082	1/4" NPT x -4 90° Fitting	1
7P250-034	1/4 NPT Street TEE	1
7P250-036	-4 Flare to 1/4 NPT	1
4FR112-020	**DISCHARGE ASSEMBLY**	**1**
7S275-300	2-3/4" x 3" Sleeve	1
7R002-044	#44 Goldseal Hose Clamps	2
7R002-016	#16 Hose Goldseal Clamps	4
8D001-001	Bypass Valve	1
7U034-016	1" GS Hose	1
7U034-016	1" GS Hose	1
7U030-046	5/32" Vacuum Line	1
7P156-082	5/32" TEE	1
7S450-200	4-1/2" x 2" Sleeve	1
7R002-072	#72 Goldseal Hose Clamps	2
7P750-100	3/4" NPT x 1" Hose Fitting	1
4FR012-030	Duct Discharge B '99 Cobra	1
7S350-200	3-1/2" x 2" Sleeve	1
7R002-056	#56 Goldseal Hose Clamps	2
4FR012-020	Duct Discharge A - Casting	1
2E229-190	**V2SQ SC-TRIM ASY, 03 MACH 1 STD**	**1**
2A036-361	S/C Pulley 3.60" 6-Grv	1
4FL120-025	**ECM CHIP PKG/SHPNG ASSY '01**	**1**
5W001-051	**JUMPER HARNESS**	**8**
8F101-265	**FUEL PUMP**	**1**
8F060-042	**FUEL INJECTOR 42 lb.**	**8**
2A046-112	**BELT, 6-RIB GATES K061120**	**1**

P/N: 4FR020-010
©2004 Vortech Engineering, LLC
All Rights Reserved, Intl. Copr. Secured
23AUG04 86-93 4V Mus. Cobra(4FR v3.1)

2003-2004 4.6L DOHC Mach 1

PARTS LIST

IMPORTANT: Before beginning installation, verify that all parts are included in the kit. Report any shortages or damaged parts immediately.

Part Number	Description	Quantity
2E229-200	**V-2 SC - TRIM**	**1**
4FR111-041	**'03 MACH 1MNTNG BRACKET ASSEMBLY**	**1**
7A375-178	3/8-16 x 1-3/4 HXHD G8	3
7K375-040	3/8 AN960 Flat Washer Plated	6
7K312-001	5/16 AN-Washer	14
4FR011-021	Mach. Mtg Bkt, '01 4V	1
7J312-875	5/16" Washer, Custom	1
7C080-065	8mm x 1.25 x 65 SOC	1
7C080-016	8mm x 1.25 x 16 HXHD	2
7C080-140	8mm x 1.25 x 140 HXHD	2
7C080-070	8mm x 1.25 x 70mm HXHD Zinc	1
7U313-133	M8 x 1.25 Stud, 4V Alternator	1
7F008-020	M8 x 1.25 Nut	1
7A375-225	3/8-16 x 2-1/4 HXHD G8	2
7J010-001	#10 Flat Washer	4
7C080-025	8mm x 1.25 x 25 HXHD	2
7C010-052	10-24 x 1/2 Button Hd. Cap	4
4fr010-011	Plaque, '99 4V Mtng Brkt	1
7C060-075	M6 x 1.0 x 75 HXHD Zink Plated	2
7A375-100	3/8-16 x 1 G5 HXHD Plated	1
7A312-175	5/16-18 x 1-3/4 HXHD G5 Zinc Plated	2
7A312-100	5/16-18 X 1 HXHD GR5P	1
7C080-130	m8 x 1.25 x 130 HXHD Zinc Plated	1
2A017-016	Shrt. Assy. Idler, V-3	1
4FR017-021	Spacer. Alternator '01 4V	2
4FR017-041	Alt Brkt, D-Side '01 4V	1
4FR017-051	Alt Brkt, P-Side, '01 4V	1
4FR111-032	Assy, Idler Plate, '01 4V	1
7J006-093	6mm Washer, Plated	2
2A046-112	Belt, K061112-Gates	1
4FH016-150	Idler Pulley, 6Rib 3" Flanged	1
4FR017-031	Spacer, Alt/Mtg Brkt, '01 4V	1
4FR016-011	Pulley, 03 Mach 1, Water Pump	1
4FR112-017	**AIR INTAKE ASSY, '03 Mach 1**	**1**
4FR012-010	Inlet Elbow, Mod Cast 4V	1
4FR110-050	90mm MAF Brkt Assy	1
7R002-056	#56 Goldseal Hose Clamp	2
7S350-200	3-1/2 x 2 Sleeve	1
7U035-001	3-1/2" Flex Hose	1
7R002-052	#52 Goldseal Hose Clamp	2
8H040-097	Air Filter, 4" Flg 7" Long	1
7A250-075	1/4-20 x 3/4 SHCS Plated	4
7F250-021	1/4-20 Nylock Nut Zinc Plated	4
7U100-052	7/16 Rubber Grommet	1
7U100-056	Vent Tube 90°	1
7R001-008	#8 Stnls Hose Clamp	1
7U100-055	Tie Wrap, 6" Nylon	10
7J250-001	1/4 SAE Washer, Plated	4
7U038-000	3/4" Heater Hose	1
4FK012-040	Air Inlet Elbow 4.6 GEN2	1
7P750-100	3/4 NPT x 1" Hose Fitting	1
7R002-064	#64 Goldseal Hose Clamp	2
7S400-200	4 x 2 Sleeve	1
8A003-040	MAF, 90mm	1
7U375-055	Vacuum Cap, 5/8" Nipple	1
7E010-049	#10 x 3/4 Hex Head Sheet	2
4PFL010-041	Brkt, Fan Resistor Reloc	1
7C010-075	10-24 x 3/4 SHCS GR5 Zinc	2
7F010-024	10-24 Nylock Nut	2
5A002-014	Sensor, Ford Intake Air Temp	1
5W001-063	Harness, Ford IAT Sensor	1
4FR014-050	PCV Tube, 03 Mach 1	1
7P375-106	PCV Valve, Ford, 3/8" Hose	1
7P625-375	Reducer, 5/8" Barb to 3/8" Barb	1
7U032-016	3/8"EFI Fuel Hse Hi-Psr	.1666'
7U033-101R	Hose, 5/8" 5/8" ID Fuel, P/Str Ret	2
7U033-010R	Hose, 5/8" ID Fuel, P/Str Ret	2
7R001-006	#6 Stnls Hose Clamp, Narrow	2
7J250-001	1/4" Washer, SAE, Pltd	6
7A250-074	1/4"-20 x .75" HHCS Pltd	3
7f250-021	1/4"-20 Nylock Nut Zinc Pltd	3
4FR010-030	Shaker Brkt, P.Side 03 Mach 1	1
4FR010-040	Shaker Brkt, D.Side 03 Mach 1	1
4FR114-012	**COOLANT PIPE ASSY '99-'03**	**1**
7U100-046	O-Rings	2
4FE014-010	Radiator Pipe Stnlss	1
7U133-050	1-1/2" x 90° Hose	1
7R002-020	#20 Goldseal Hose Clamps	3
7R002-024	#24 Goldseal Hose Clamps	3
7P375-002	3/8" Pipe Plug	1
70000	Inspector Number	0
4FR014-012	U-Bend Assembly-Coated	1
4FR014-020	'99 L-Bend Assembly-Coated	1
7F006-093	6mm Nylock Nuts	2
7P500-020	Tube Nut	1
7P375-042	Male Connector	1
4FR017-061	Spacer, Rad Pipe, 03 Mach 1	2
7J250-001	1/4" Washer	2
4FH130-036	**OIL DRAIN ASSEMBLY**	**1**
7U030-036	1/2" x 14" Oil Drain Hose	1
7R001-008	#8 Stainless Hose Clamps	2
7P500-003	90° 1/2" Alum. Tube	1
4FH130-026	**OIL FEED ASSEMBLY**	**1**
7U030-026	1/4" x 26" Oil Feed Hose	1
7P525-067	.525 Crimp Ferrules	2
7P250-066	#4 Swivel x 1/4" Hose Barb Fitting	2
7P125-103	1/8" NPT -4 x 45° Male Elbow	1
7P250-082	1/4" NPT x -4 90° Fitting	1
7P250-034	1/4 NPT Street TEE	1
7P250-036	-4 Flare to 1/4 NPT	1
4FL120-025	**ECM CHIP PKG/SHPNG ASSY '01**	**1**
5W001-051	**JUMPER HARNESS**	**8**
8F101-265	**FUEL PUMP**	**1**
8F060-042	**FUEL INJECTOR 42 lb.**	**8**
4FR112-030	**DISCHARGE ASSEMBLY '99 4V COOLER**	**1**
7R002-044	#44 Goldseal Hose Clamps	2
7R002-016	#16 Goldseal Hose Clamps	4
8D001-001	Bypass Valve	1
7U034-016	1" GS Hose	0.229'
7U034-016	1" GS Hose	0.312'
7U030-046	5/32" Vacuum Line	4'
7P156-082	5/32" TEE	1
7S450-200	4-1/2" x 2" Sleeve	1
7R002-072	#72 Goldseal Hose Clamps	2
7S275-300	2-3/4" x 3" Sleeve	1
4FR012-030	Duct Discharge B	1
7R002-056	#56 Goldseal Hose Clamp	1
7P500-078	1/2" NPT x 3/4" HOSE Fits	2
7R002-048	#48 Goldseal Hose Clamps	2
7S350-301	Reducer, 3-1/2" to 3"	1
8N101-060	Welded Core Assembly	1
008341	Powercooler Decal	1
8N106-030	**WATER COOLER ASSEMBLY, 4.6**	**1**
7A250-075	1/4-20 X 3/4 SHCS PLTD	4
7F250-021	1/4-20 Nylock Nuts	4
7J250-001	1/4 SAE Washers	8
7P500-026	1/2 NPT-3/4 Barbs 90°	2
8N006-010	Water Cooler	1
7E010-075	#12 x 3/4" Sheet Metal Screw	4
7J010-001	#10 Flat Washers	4
8N010-050	Mount Tabs, Cooler	2
8N107-020	**WATER PUMP ASSEMBLY, 4.6**	**1**
5W001-011	16-14 GA Eyelet .25" Hole	1
5W001-012	Solderless Connector	1
5W018-010	18GA Strd Wire Red	8-1/4'
5W001-019	Solderless Connectors 10-12	2
5W001-014	Fuse Holder 10 GA Wire	1
5W001-015	Fuse, Blade Type 20 amp	1
5W001-015	12-10 GA Female Slide	1
5W001-002	Fuse Tap	1
8N010-060	Bracket, Bosch Water Pump	1
8F001-403	Pump, Water Bosch	1
5W001-050	Connector, Fuel Injector	1
7E010-075	#12 x 3/4" Sheet Metal Screws	2
7J010-001	#10 Flat Washers	2
7U133-060	3/4" x 90° Hose Elbow	1
5W001-024	Mini ATC Fuse Tap	1
5w001-025	Female Slide, Insulated Mini	1
8N105-030	**WATER TANK ASSEMBLY, 4.6**	**1**
7U038-000	3/4" Heater Hose	20
7R007-001	Nylon Clamps 1-1/8"	8
7R003-016	Adel Clamps, 7/8"	3
7E010-075	#12 x 3/4" Sheet Metal Screws	3
7J010-001	#10 Flat Washers	3
7U100-044	Tie Wraps, 4" Nylon	16
7U100-066	Tie Wraps, 11" Nylon	6
8N105-010	Water Tank w/Fitting	1
8N201-060	**PWR COOLR ASSY '99 4.6 4V**	**1**
8N101-060	Welded Core Assy '99 4.6 4V	1
7R002-048	#48 Goldseal Hose Clamp	1
7P500-078	1/2NPT x 3/4 Hose Fit	2
7S350-301	Reducer, 3.50-3.00	1
008341	PowerCooler Decal	1
2A046-115	**111.5" belt**	**1**

P/N: 4FR020-010
©2004 Vortech Engineering, LLC
All Rights Reserved, Intl. Copr. Secured
23AUG04 86-93 4V Mus. Cobra(4FR v3.1)

This Page Left Intentionally Blank

©2004 Vortech Engineering, LLC
All Rights Reserved, Intl. Copr. Secured

1. PREPARATION/REMOVAL

A. Disconnect the negative battery cable.

B. Loosen the water pump pulley bolts.

C. Remove the accessory drive belt.

> ***NOTE:*** *The supplied 8mm x 16 bolt can be threaded into the spring tensioner idler hole to remove the accessory drive belt.*

D. Remove the "question mark" shaped crankcase vent hose with attached fittings from between the passenger side valve cover and the air inlet.

E. Remove all components that lead to the throttle body including the rubber air inlet duct, mass air flow (MAF) sensor, air filter assembly and intake air temperature (IAT) sensor. Separate the MAF and IAT sensors from the intake assembly and set aside.

F. ***Mach 1 Only:*** Remove the shaker scoop (upper and lower pieces), steel support bracket attached to the top of the intake manifold and the aluminum support bracket attached to the front cover of the engine. (See *Fig. 1-a, 1-b.*)

G. Drain approximately one gallon of coolant from the radiator. Remove the upper and lower radiator hoses from the steel water tube junction located around the alternator. Disconnect the water temperature sensor connector located on the water tube.

H. Remove the steel water tube assembly from the engine by removing the 2 nuts. Pull the tube directly upwards.

I. Remove the coolant temperature sensor from the factory water tube and set aside.

J. Remove the rear attachment screws that secure the steel alternator support to the intake manifold. Remove the two screws that attach the alternator base to the engine block. This will allow for the alternator to be raised. Leave the factory steel bracket attached to the top of the alternator intact (the two front screws will remain).

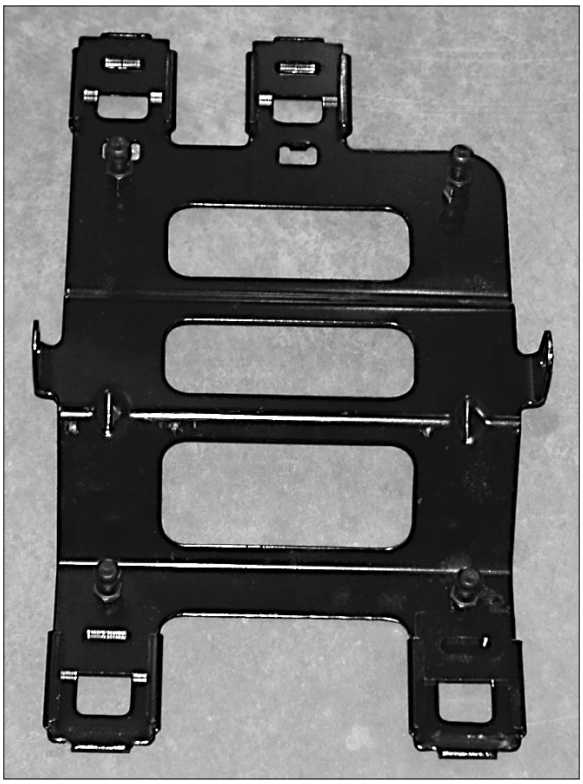

Fig. 1-a / Mach 1 Models Only

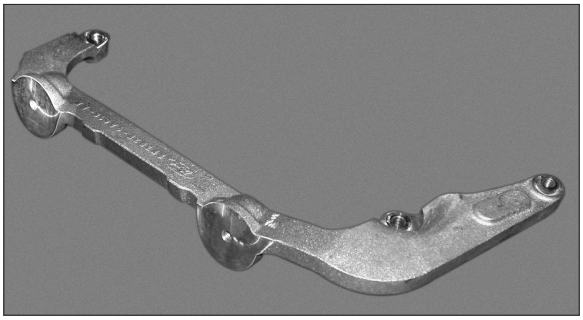

Fig. 1-b / Aluminum Bracket Removed From Front Cover / Mach 1 Models Only

*** 1999 Models and Mach 1 only**

**** 2001-2004 Models only**

P/N: 4FR020-010
©2004 Vortech Engineering, LLC
All Rights Reserved, Intl. Copr. Secured
23AUG04 86-93 4V Mus. Cobra(4FR v3.1)

2. OIL DRAIN

A. To provide an oil drain for the supercharger, it is necessary to make a hole in the oil pan. Locate and mark the hole per Fig. 2-a. The drain hole must be punched rather than drilled.

B. Remove the paint around the hole area.

C. Use a small center punch to perforate the pan and expand hole. Switch to a larger diameter punch and expand the hole further to approximately 9/16" diameter. Most punches are made from hexagon material and may be placed in a socket with an extension to make this procedure easier.

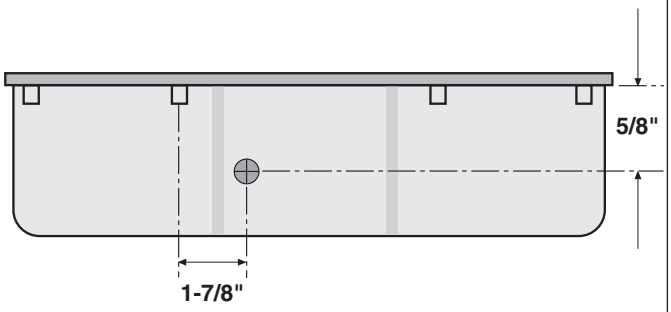

Fig. 2-a - Front of Oil Pan

D. Tap the hole with a 3/8" NPT tap approximately 1/4" deep. Pack the flutes of the tap with heavy grease to hold chips. Use a small magnet to check for any stray chips.

> ***NOTE:*** *This method of rolling over the lip of the hole and tapping it works very well if carefully done and should cause no problems.*

E. Thoroughly clean the threaded area. Apply a small amount of silicone sealer to the new threads. Apply more sealer to the male portion of the 3/8" NPT x 1/2" inverted flare fitting and secure in hole. Make sure a seal is formed all around the fitting.

F. Thread the tube nut and 1/2" x 90° aluminum tube into the inverted flare fitting by hand. Do not tighten until after the supercharger drain hose has been connected. (See Figs. 2 b, 2 c.)

G. Drain the engine oil and change the filter.

H. Temporarily cap off the oil drain fitting to keep out debris until drain hose is attached at a later time.

I. Refill engine with 5W/30 synthetic or conventional SH/CF rated motor oil.

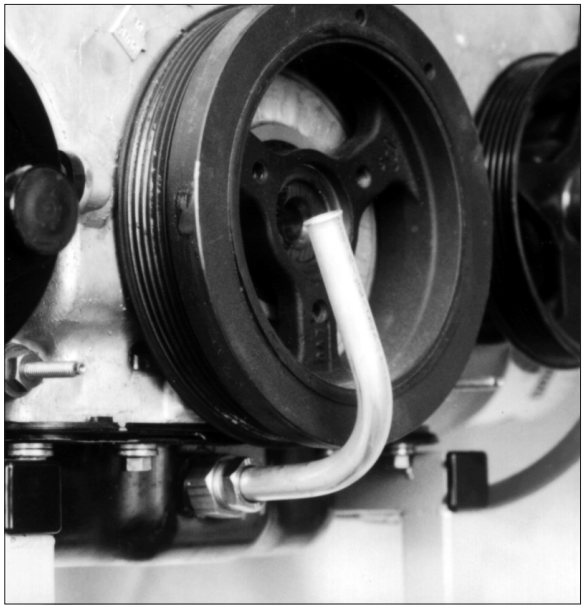

Fig. 2-b

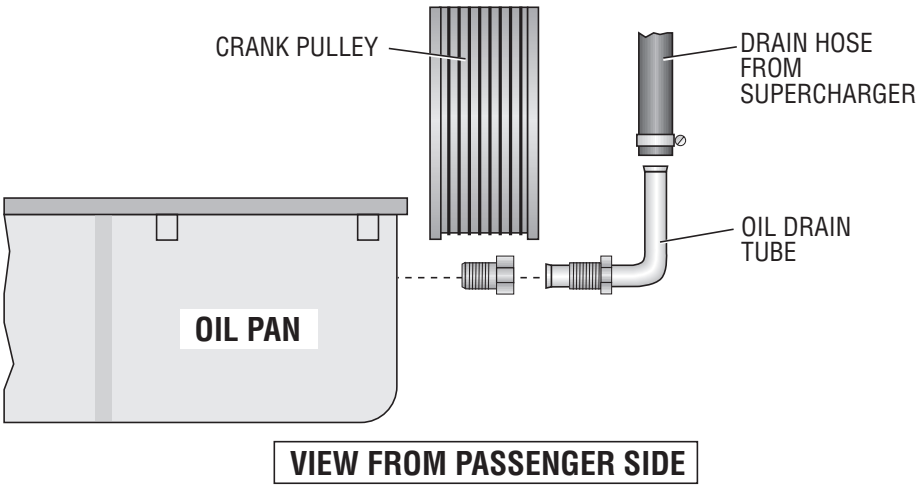

Fig. 2-c

P/N: 4FR020-010
©2004 Vortech Engineering, LLC
All Rights Reserved, Intl. Copr. Secured
23AUG04 86-93 4V Mus. Cobra(4FR v3.1)

3. OIL FEED

A. Remove the 1/4" NPT socket head plug located perpendicular to and directly beneath the factory oil pressure sending unit. This is found on the engine's driver's side below the oil filter.

B. Thread the supplied 1/4" NPT #4 flare x 90° fitting into the pressure sending unit mount using engine oil on the pipe threads (see *Fig. 3-a*). The use of Teflon tape or other sealants is not recommended as a small piece of either may break loose and cause blockage of the oil feed orifice, resulting in supercharger failure. Rotate the fitting so that the flare points toward the front of the vehicle.

C. Temporarily cap off the flare fitting to prevent dirt from entering. The oil feed will be connected at a later time.

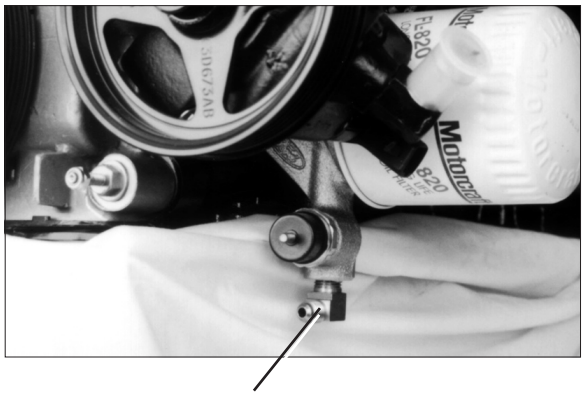

1/4" NPT x 90° FITTING

Fig. 3-a

4. FUEL PUMP INSTALLATION

> ***NOTE:*** *It is recommended when performing this step that the fuel level in the tank be below 1/4 tank.*

A. Raise the rear of the car and support it with jack-stands.

B. Open the fuel door and remove the fuel-cap and the three filler neck screws using a 10mm socket.

C. Remove the fuel filter inlet line with a 3/8 sprin-glock tool.

D. With the weight of the fuel tank supported with a jack, remove the bolts securing the two fuel tank straps.

E. Slowly lower the fuel tank, allowing it to lean over with the filler side up, until the electrical connections leading to the center mounted fuel pump are revealed. Disconnect these two electrical connections.

F. Remove the six bolts securing the fuel pump access cover (on top of the fuel tank) with an 8mm wrench. Depress the two clips securing the plastic fuel pump enclosure and slide it out of the tank. The fuel sender float is attached to the fuel pump enclosure and must be handled with care. Ensure that the tank has been lowered enough to remove the fuel pump enclosure.

G. Remove the two screws securing the plastic fuel pump outlet manifold to the enclosure cap. Pull the manifold up and away from the fuel pump.

H. Remove the three screws securing the fuel pump enclosure's cover using a 3/16 nut-driver and remove the cover.

I. Remove the stock fuel pump from its enclosure. Separate the rubber pump support from beneath the filter and install it on the supplied pump. Secure the support with the new filter provided.

P/N: 4FR020-010
©2004 Vortech Engineering, LLC
All Rights Reserved, Intl. Copr. Secured
23AUG04 86-93 4V Mus. Cobra(4FR v3.1)

4. FUEL PUMP INSTALLATION, cont'd.

J. Using the supplied fuel pump, reassemble the fuel pump assembly and canister with cap.

K. Reinstall the canister assembly into the fuel tank and reattach the electrical connections.

L. Reinstall the fuel tank, reconnect the fuel filter inlet line, reattach the fuel filler neck and reinstall the fuel cap.

M. Turn the ignition key on and check the fuel pump for leaks.

5. FUEL INJECTOR REPLACEMENT

A. Disconnect the EGR tube from the EGR valve at the back of the intake manifold. Remove all bolts securing the upper manifold to the lower manifold. Unplug the electrical connector from the throttle body. The upper manifold should now move up enough to access all fuel injectors.

B. Disconnect the eight (8) fuel injector wiring clips and retainers from the fuel injectors. Release any residual fuel pressure from the rail by opening the schrader valve on the rail. Have a fire extinguisher nearby and use extreme caution.

C. Remove the bolts holding down the factory fuel rail onto the intake manifold. Lift up on to the rails evenly, removing all eight (8) injectors.

D. Using a small amount of clean motor oil, lightly lubricate the O-rings on both ends of the Vortech supplied fuel injectors.

E. Install the new injectors into the fuel rails with the terminals facing outward.

F. Carefully lower the fuel rail/injector assembly down onto the intake manifold. Check to see that each injector has been seated properly into the manifold.

G. Tighten down the fuel rail assembly with the original bolts.

H. Use supplied jumper harnesses to connect the factory fuel injector plug to the newly installed fuel injectors (see *Fig. 5-a*).

I. Reinstall all components removed in step A.

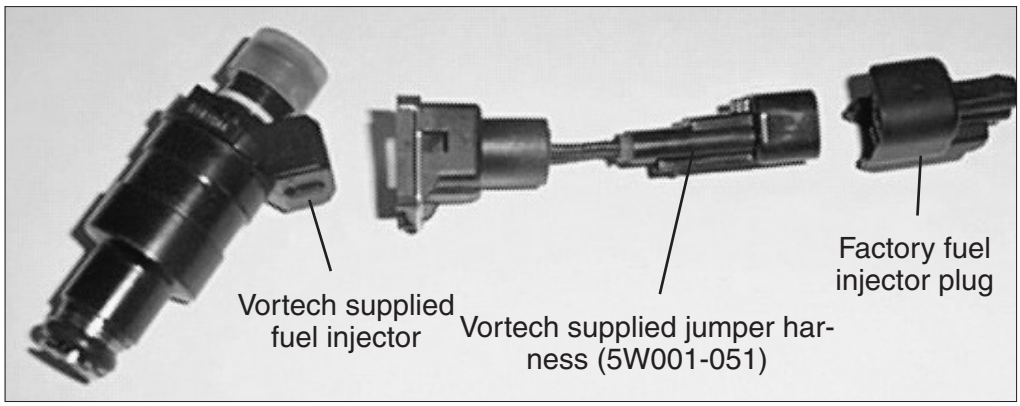

Fig. 5-a

©2004 Vortech Engineering, LLC
All Rights Reserved, Intl. Copr. Secured

6. AIR CONDITIONING LINE MODIFICATION

> ***NOTE:*** *Air conditioning lines are under high pressure and the fluid is highly toxic. Therefore, use extreme caution when bending the line to avoid kinking or breaking the line. Support the assembly as much as possible while bending for clearance.*

A. Carefully bend the high pressure air conditioning line (the line with the pressure port and cap) so that the pressure port rotates down (for supercharger inlet clearance). (See *Fig. 6-a*.)

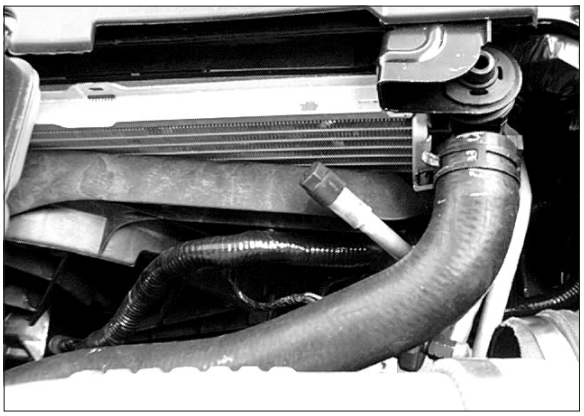

Fig. 6-a

7. FAN RESISTOR RELOCATION (2001 and 2003-2004 Mach 1 models only)

A. ***2003-2004 Mach 1:*** In order to remove the fan resistor, you must unbolt the fan shroud from the radiator. Pull the fans forward and remove the resistor for the rear of the fans.

B. ***Cobra:*** Unsnap the resistor from the fanshroud bracket. (See Fig. 7-b.) Pull the wire clips securing the wires to the fan away from the shroud so that the resistor can reach down. With the supplied relocation bracket and sheet metal screws mount the resistor (see Fig. 7-a).

C. ***SHROUD MODS:*** Trim the plastic which holds the fan high/low resistor as shown in Fig. 7-b to give clearance for the inlet duct.

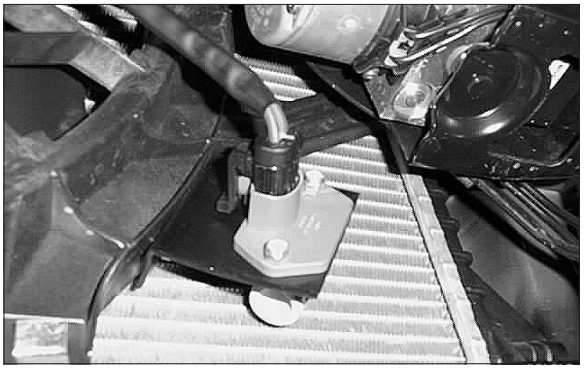

Fig. 7-a

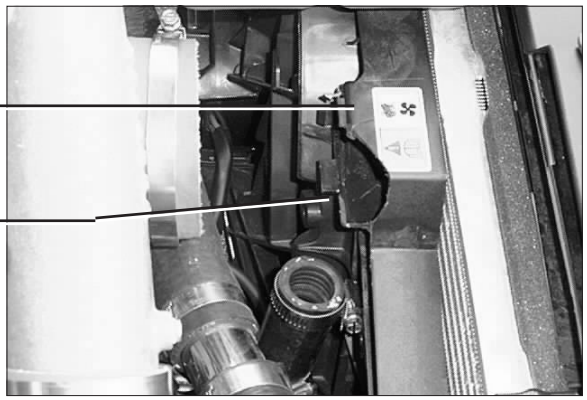

Fig. 7-b

P/N: 4FR020-010
©2004 Vortech Engineering, LLC
All Rights Reserved, Intl. Copr. Secured
23AUG04 86-93 4V Mus. Cobra(4FR v3.1)

8. MAIN BRACKET ASSEMBLY/DRIVE BELT

A. Attach the supplied 1/8" NPT x 45° flare fitting and oil feed hose to the oil feed fitting on the supercharger. Rotate the fitting so that it points forward, toward the volute side of the supercharger, perpendicular to the front cover. When tightening fitting, use a 1/2" wrench on the oil feed base for support.

> ***WARNING:*** *When threading the 1/8" NPT x 45° flare fitting into the supercharger, use engine oil on the pipe threads for lubrication. Teflon tape, paste or other sealant is not recommended as it might loosen and cause blockage of the oil feed orifice, resulting in supercharger failure.*

B. Slide the supplied 1/2" oil drain hose onto the supercharger drain and secure with a #8 hose clamp.

C. Using the supplied 3/8-16 x 1.75, 2.25 bolts and 3/8" AN washers, secure the supercharger to the Vortech aluminum mounting bracket. (See *Figs. 8-a, 8-b*.) Do not overtighten bolts.

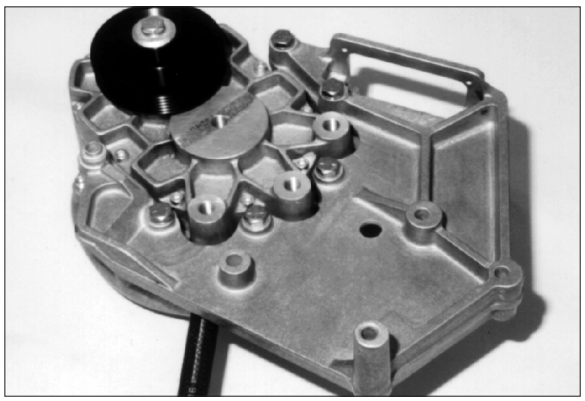

Fig. 8-a

Fig. 8-b

©2004 Vortech Engineering, LLC
All Rights Reserved, Intl. Copr. Secured

8.1 MAIN BRACKET ASSEMBLY/DRIVE BELT - 1999 Models

A. Remove the three timing cover bolts, fixed idler pulley bolt (replace the factory idler pulley bolt with the supplied 8mm x 16 bolt and heavy duty washer) and passenger's side alternator mounting bolt from the front of the engine. Remove the upper bolt/stud located on the factory belt tensioner and replace with the supplied 8mm x 25mm bolt and washer. Remove the middle bolt also located on the belt tensioner. (See *Fig. 8.1-a*.)

B. Remove the air conditioning line silencer bracket and mounting hardware from the silencer and engine front cover. Trim the corner of the bracket per *Fig. 8.1-b* on the following page. Enlarge the smaller of the two holes on the bracket with an 11/32" drill, remove any sharp edges around enlarged hole and reinstall onto the silencer. (See *Fig. 8.1-c*.)

> ***NOTE:*** *When mounting the supercharger bracket assembly to the front cover, make sure that the air conditioning line silencer bracket is sandwiched in between the Vortech aluminum bracket and the front cover in positions #1 and #2. See Fig. 8.1-c.*

C. Install the supplied M8 x 1.25 threaded stud into the passenger side alternator mount. (Make sure the end with the least number of threads goes into the block.)

> ***NOTE:*** *On 1999 models, a tensioner stop has been added to the tensioner. This must be removed before bracket installation.*

1999 models

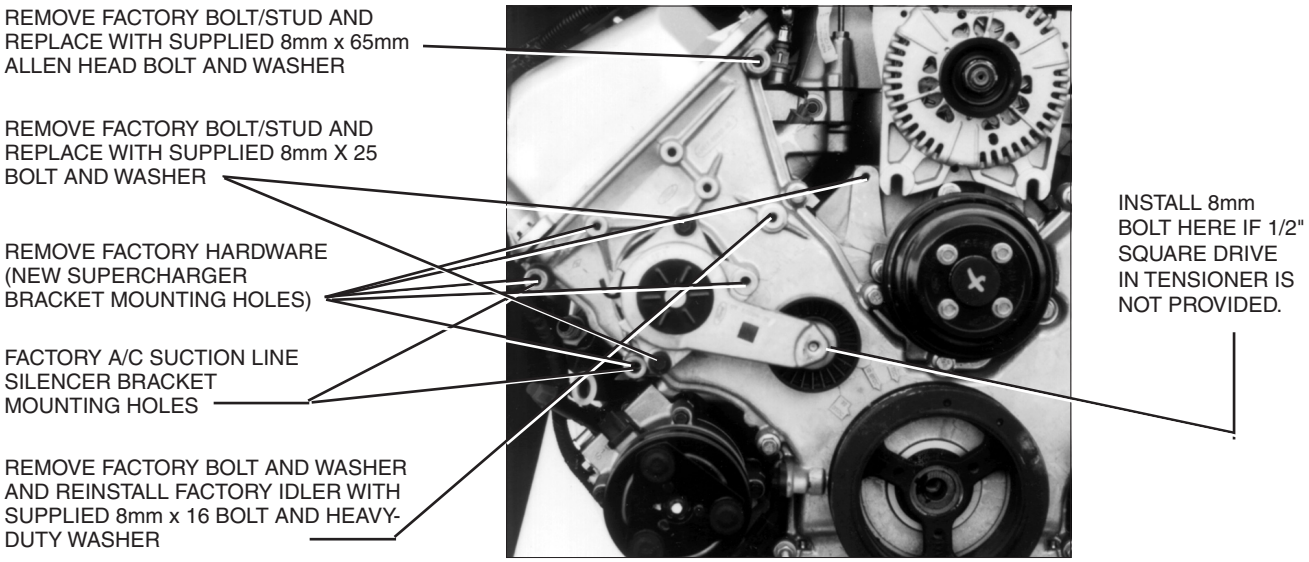

Fig. 8.1-a

P/N: 4FR020-010
©2004 Vortech Engineering, LLC
All Rights Reserved, Intl. Copr. Secured
23AUG04 86-93 4V Mus. Cobra(4FR v3.1)

8.1 MAIN BRACKET ASSEMBLY/DRIVE BELT - 1999 Models, cont'd.

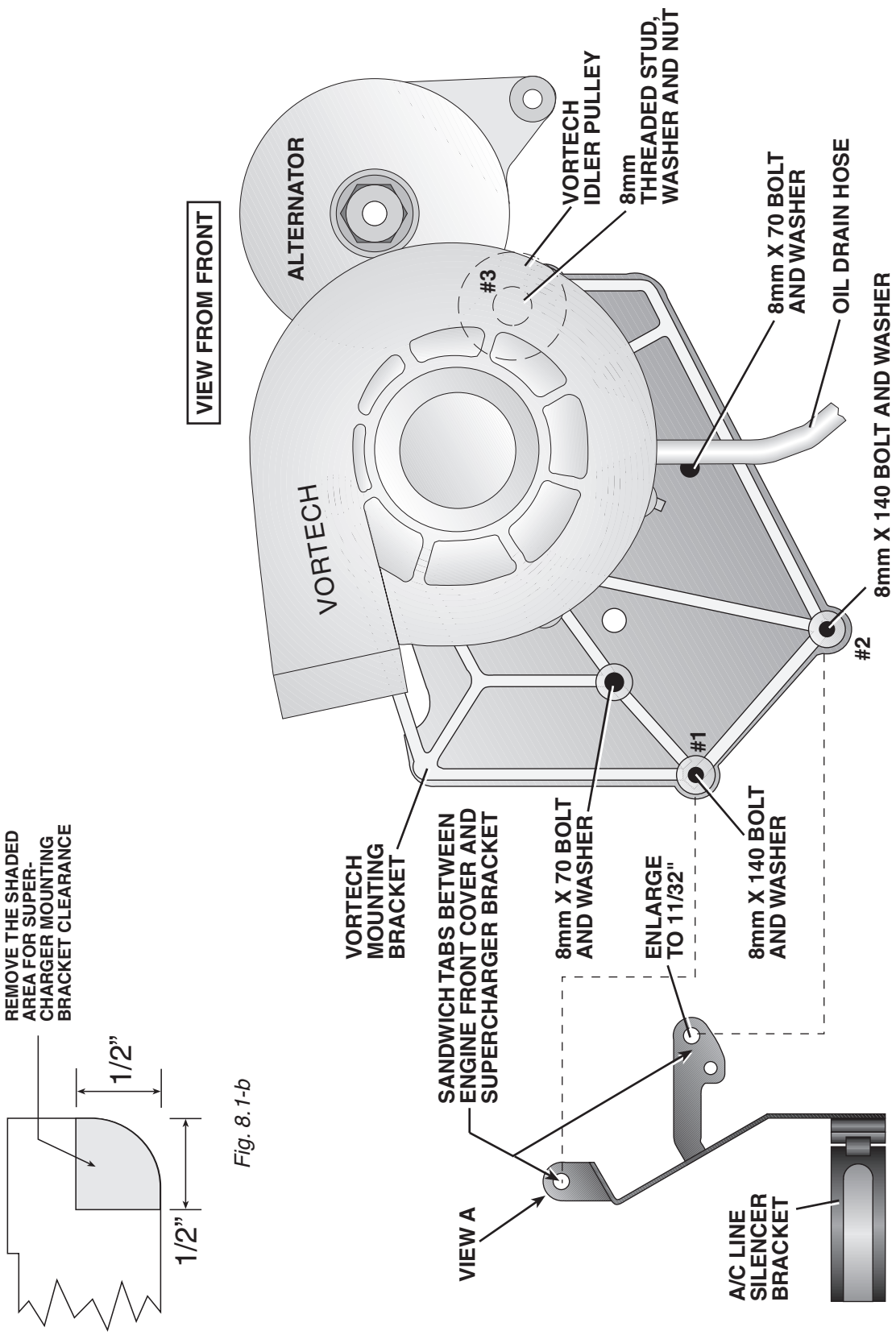

Fig. 8.1-b

Fig. 8.1-c

©2004 Vortech Engineering, LLC
All Rights Reserved, Intl. Copr. Secured

8.1 MAIN BRACKET ASSEMBLY/DRIVE BELT - 1999 Models, cont'd.

E. Loosen and remove the three nuts securing the factory coolant reservoir to the car. Temporarily move aside to provide room to mount the supercharger. (Do not remove any hoses or connectors from reservoir.)

F. Remove the factory flanged water pump pulley and replace with the supplied non-flanged pulley.

G. Following *Figs. 8.1-c & 8.1-d*, attach the supercharger/aluminum bracket assembly with the Vortech idler pulley and idler spacer to the alternator stud and front cover using the supplied 8mm hardware. Route the new, longer belt around the outside of the supercharger drive pulley, then around the inside of the Vortech idler. Finish routing the belt around all of the pulleys, except for the water pump. Make sure that the Vortech idler pulley and spacer (located against the alternator base), are seated and located in their proper positions before tightening down the bolts (see *Fig. 8.1-e* for belt routing).

> ***NOTE:*** *When installing the Vortech idler pulley, make sure that the bearing shim located between the bearings in the pulley allows for complete insertion of the idler spacer and bracket pilot. Install the steel idler spacer into the idler pulley and verify that the shim is not interfering with the idler spacer pilot.*

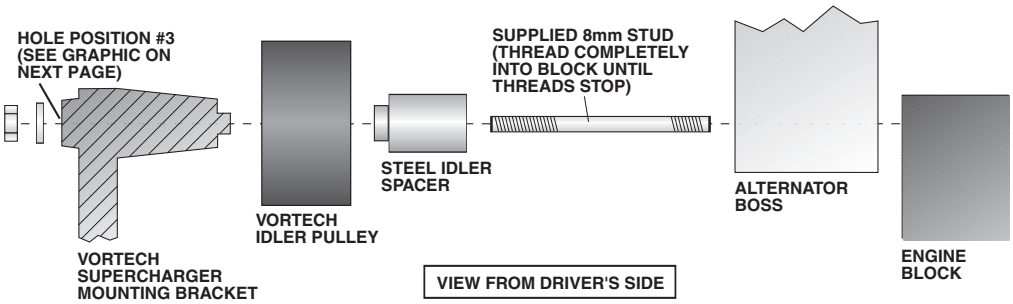

Fig. 8.1-d

1999 Models Only

P/N: 4FR020-010
©2004 Vortech Engineering, LLC
All Rights Reserved, Intl. Copr. Secured
23AUG04 86-93 4V Mus. Cobra(4FR v3.1)

8.1 MAIN BRACKET ASSEMBLY/DRIVE BELT - 1999 Models, cont'd.

H. After the bracket has been fully secured (the belt should be properly routed around/under all pulleys except for the water pump), use a 1/2" breaker bar or ratchet to release the belt tension. Push the belt over the top radius of the water pump pulley, underneath the crank pulley, over the top of the tensioner pulley and release the tensioner (see *Fig. 8.1-e*).

I. Route the oil drain hose down to the oil pan tube previously installed. The hose must be routed downhill, free from dips and kinks. Trim hose end if necessary, slide onto the drain tube and secure with #8 hose clamp. Support fitting in oil pan with a wrench while tightening the drain tube fitting.

> ***IMPORTANT:*** *It is imperative that the tensioner does not get overloaded when being pulled down during belt installation. Bending of the tensioner may cause belt throwing/shredding problems when vehicle is driven at high speeds.*

J. Route the oil feed hose next to the drain hose, down to the feed fitting and secure. Use tie wraps to fasten the lines together.

K. Reinstall the factory coolant reservoir and secure.

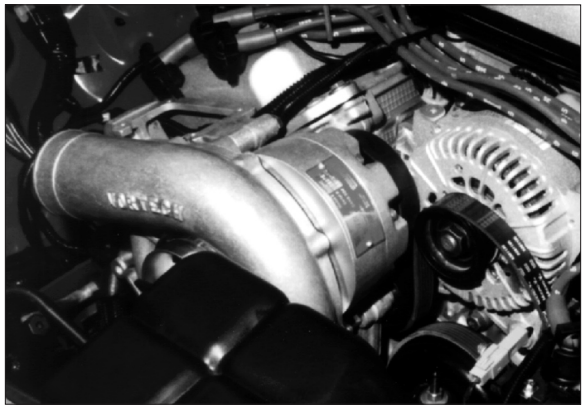

Fig. 8-h

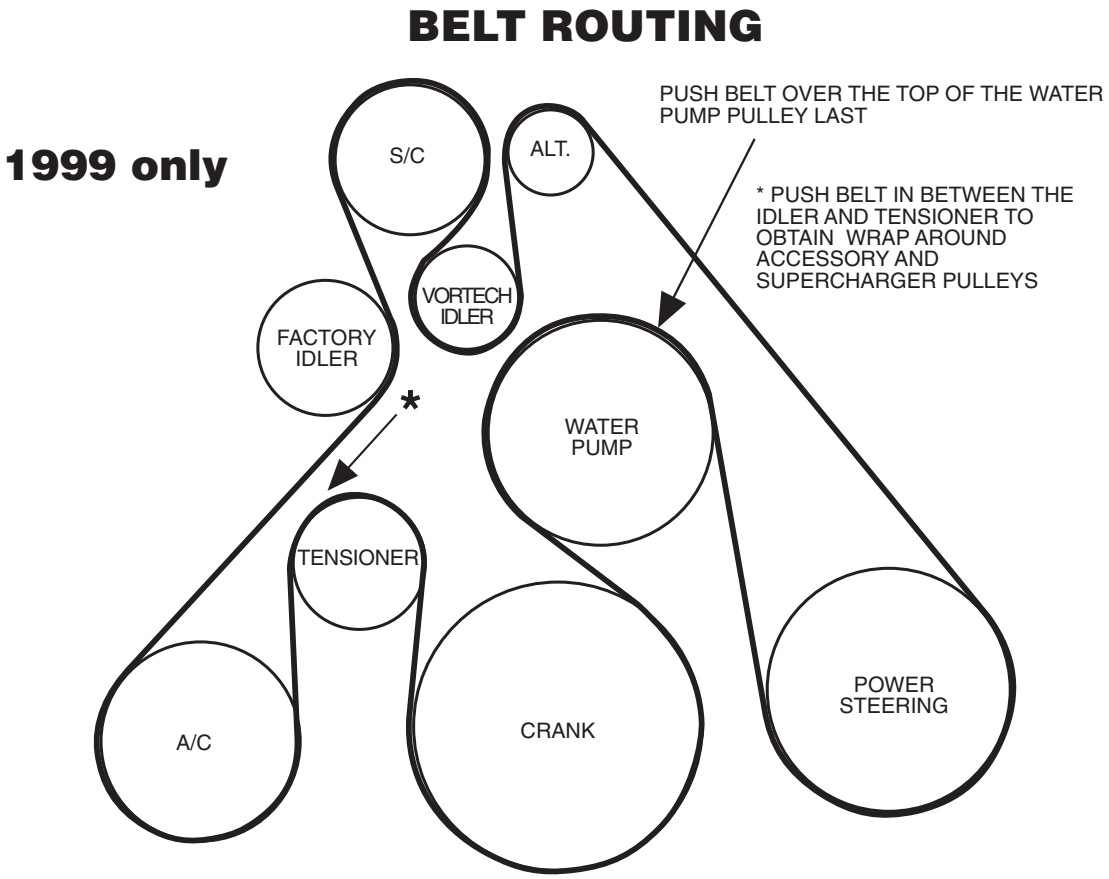

Fig. 8.1-e

©2004 Vortech Engineering, LLC
All Rights Reserved, Intl. Copr. Secured

8.2 MAIN BRACKET ASSEMBLY/DRIVE BELT - 2001-2004 Models, cont'd.

A. Remove the three timing cover bolts, fixed idler pulley bolt (replace the factory idler with the supplied Vortech composite idler) and passenger's side alternator mounting bolt from the front of the engine. (See *Fig. 8.2-a*.)

B. Remove the air conditioning line silencer and mounting hardware from the engine front cover.

C. Install the supplied M8 x 1.25 threaded stud into the passenger's side alternator mount. (Make sure the end with the least number of threads goes into the block.)

D. Loosen and remove the three nuts securing the factory coolant reservoir to the car. Temporarily move aside to provide room to mount the supercharger. (Do not remove any hoses or connectors from the reservoir.)

E. ***Mach 1 Models Only:*** Remove the factory water pump pulley and replace with the supplied aluminum pulley. Use the factory bolts.

F. ***Mach 1 Models Only:*** Remove the belt tensioner from the front cover. Grind the top belt shield section off as seen in *Fig. 8.2-b.*

G. Following *Figs. 8.2-c* through *8.2-m* (**Mach 1 Models Ignore** *Fig. 8.2-l)*, first route the Vortech supplied supercharger belt and then attach the idler relocation assembly and mounting bracket/supercharger assembly to the front cover using the supplied 8mm hardware. Finish by routing around all of the pulleys along with the supercharger pulley, except for the water pump.

H. After the bracket has been fully secured (the belt should be properly routed around/under all pulleys except the water pump). Use a large pair of channel locks to release the belt tension. Push the belt over the top radius of the water pump pulley, then release the tension. (See *Fig. 8.2-n*.)

I. Secure the air conditioner canister to the Vortech mounting bracket as shown in *Fig. 8.2-m*.

> ***IMPORTANT:*** *It is imperative that the tensioner does not get overloaded when being pulled down during belt installation. Bending of the tensioner may cause belt throwing/shredding problems when vehicle is driven at high speeds.*

J. Route the oil feed hose next to the drain hose down to the feed fitting and secure. Use tie wraps to fasten the lines together.

K. Reinstall the factory coolant reservoir and secure.

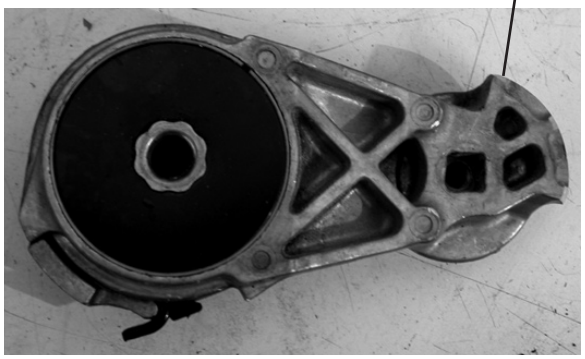

Fig. 8.2-b / Mach 1 Only

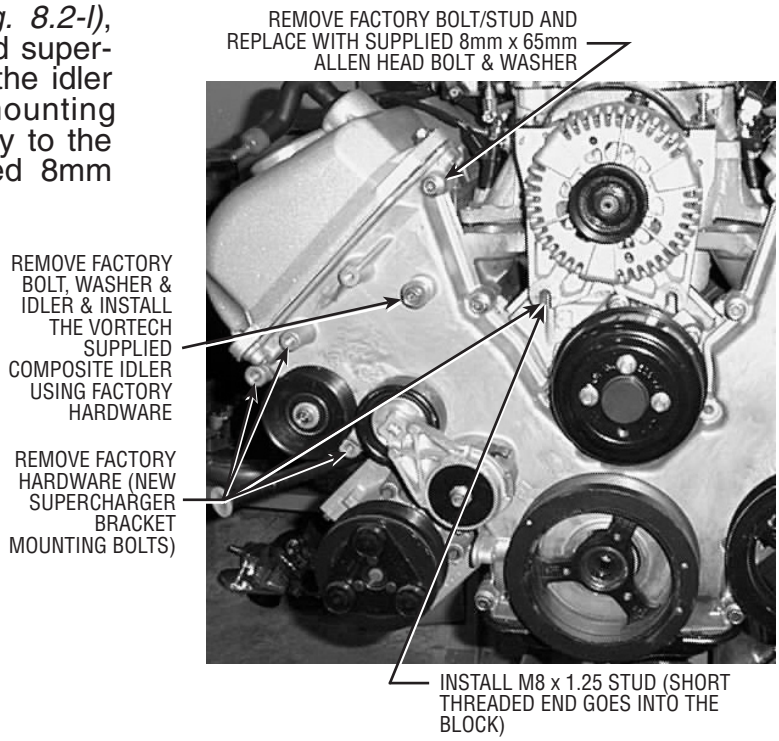

Fig. 8.2-a

P/N: 4FR020-010
©2004 Vortech Engineering, LLC
All Rights Reserved, Intl. Copr. Secured
23AUG04 86-93 4V Mus. Cobra(4FR v3.1)

8.2 MAIN BRACKET ASSEMBLY/DRIVE BELT - 2001-2004 Models

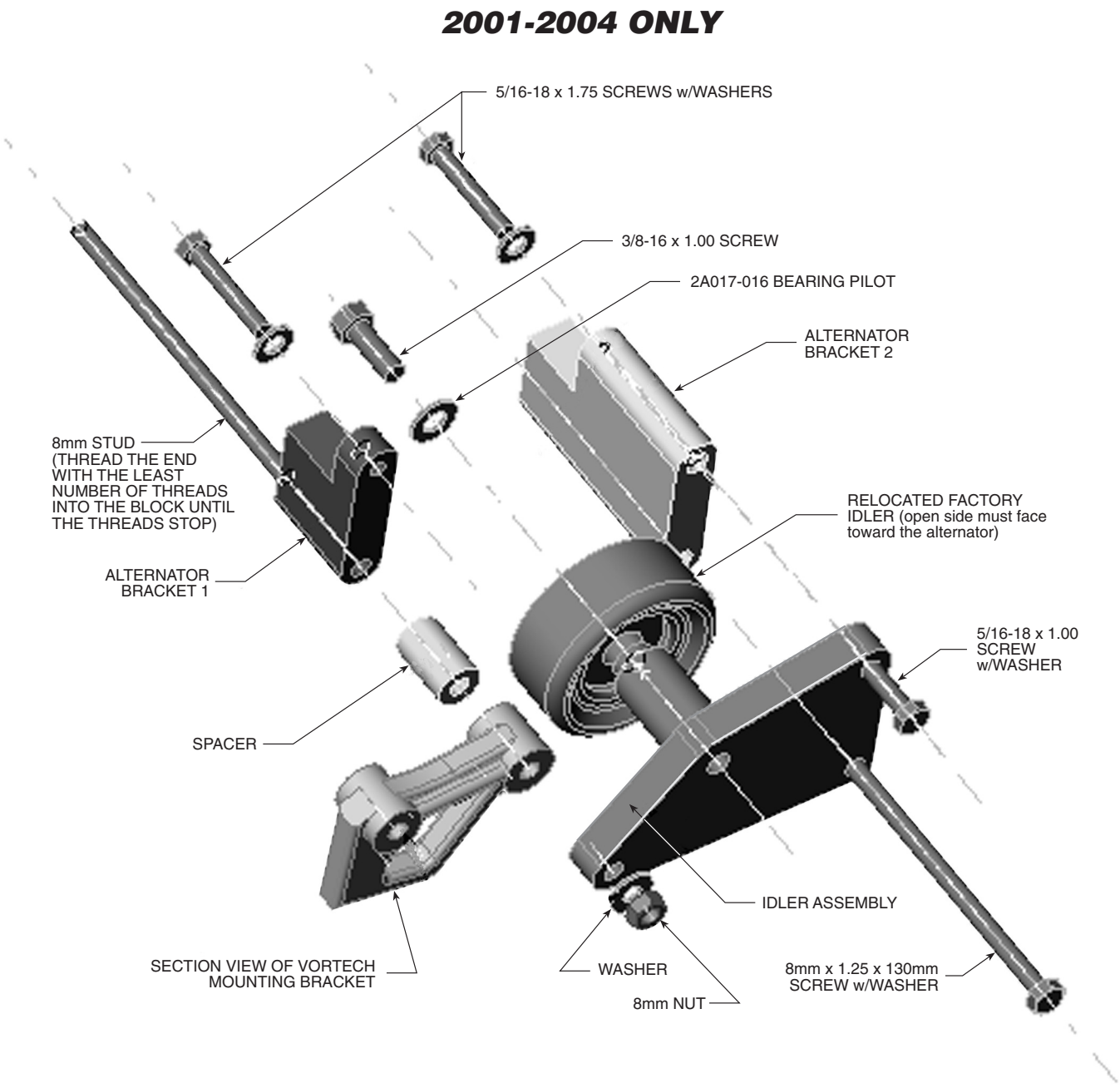

Fig. 8.2-c

P/N: 4FR020-010
©2004 Vortech Engineering, LLC
All Rights Reserved, Intl. Copr. Secured
23AUG04 86-93 4V Mus. Cobra(4FR v3.1)

8.2 MAIN BRACKET ASSEMBLY/DRIVE BELT - 2001-2004 Models, cont'd.

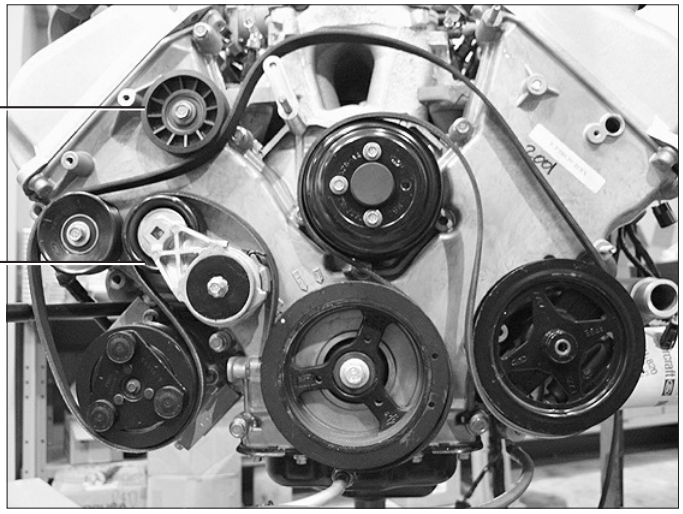

Fig 8.2-d / Step 1

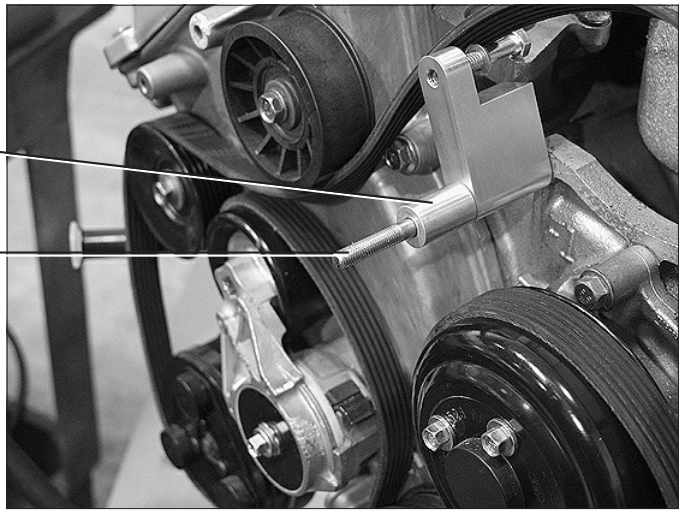

Fig 8.2-e / Step 2

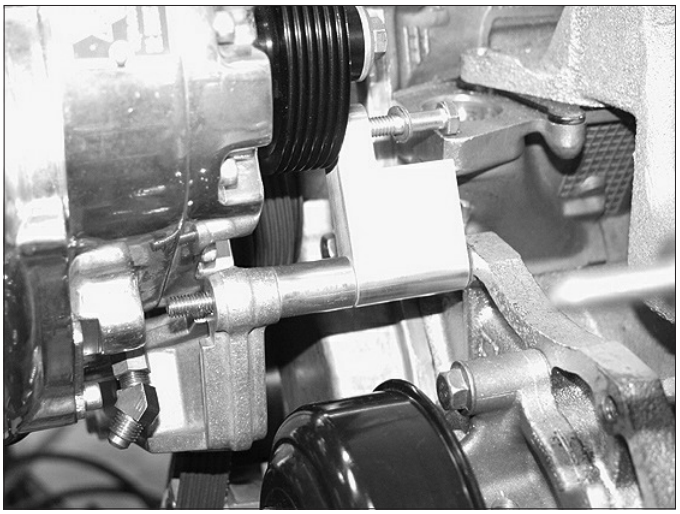

Fig 8.2-f / Step 3 - Install supercharger/bracket assembly as shown

P/N: 4FR020-010
©2004 Vortech Engineering, LLC
All Rights Reserved, Intl. Copr. Secured
23AUG04 86-93 4V Mus. Cobra(4FR v3.1)

8.2 MAIN BRACKET ASSEMBLY/DRIVE BELT - 2001-2004 Models, cont'd.

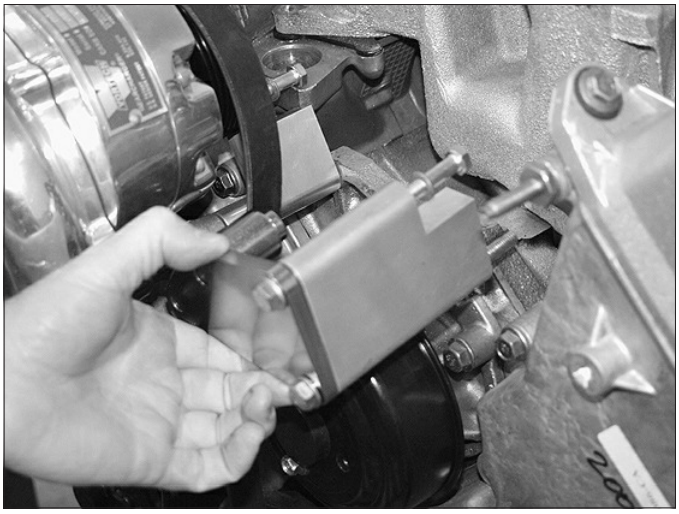

Fig. 8.2-g / Step 4 - Install alternator bracket 2 with idler plate assembly

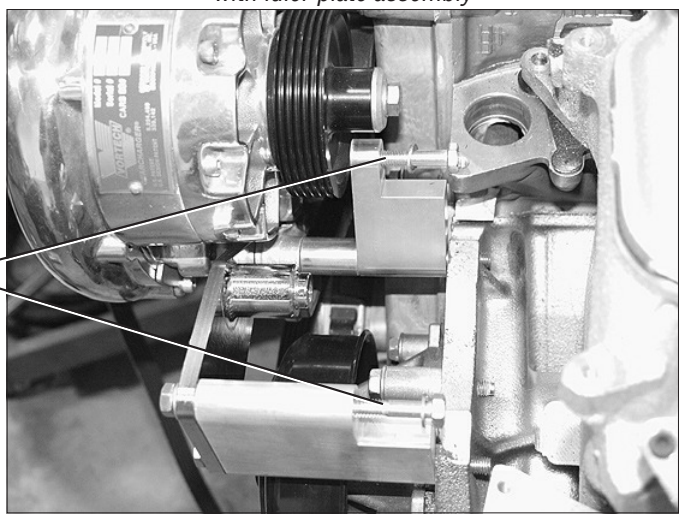

Fig. 8.2-h / Step 5

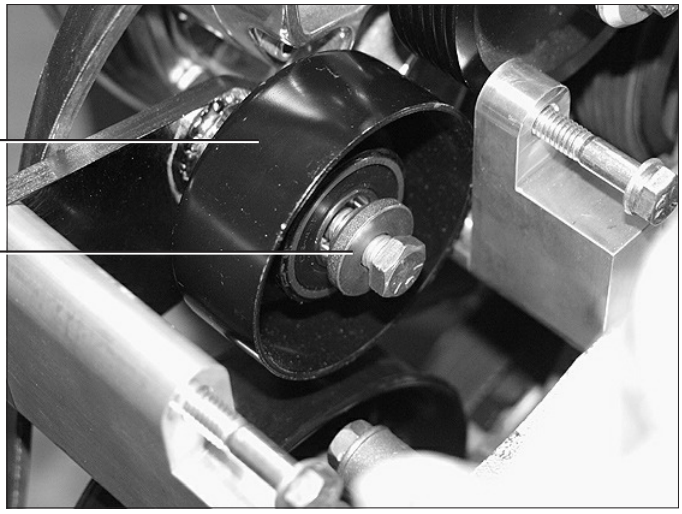

Fig. 8.2-i / Step 6

©2004 Vortech Engineering, LLC
All Rights Reserved, Intl. Copr. Secured

8.2 MAIN BRACKET ASSEMBLY/DRIVE BELT - 2001-2004 Models, cont'd.

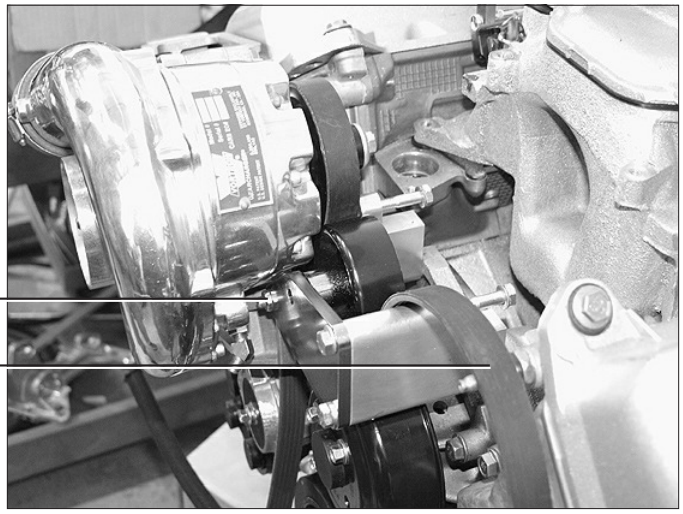

Fig. 8.2-j / Step 7

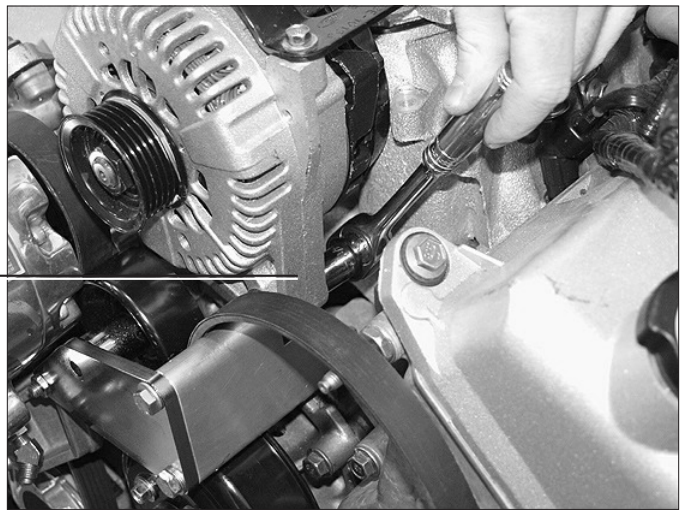

Fig. 8.2-k / Step 8 - Complete tightening hardware

Fig. 8.2-l / Step 9 (Cobra Models Only)

P/N: 4FR020-010
©2004 Vortech Engineering, LLC
All Rights Reserved, Intl. Copr. Secured
23AUG04 86-93 4V Mus. Cobra(4FR v3.1)

8.2 MAIN BRACKET ASSEMBLY/DRIVE BELT - 2001-2004 Models, cont'd.

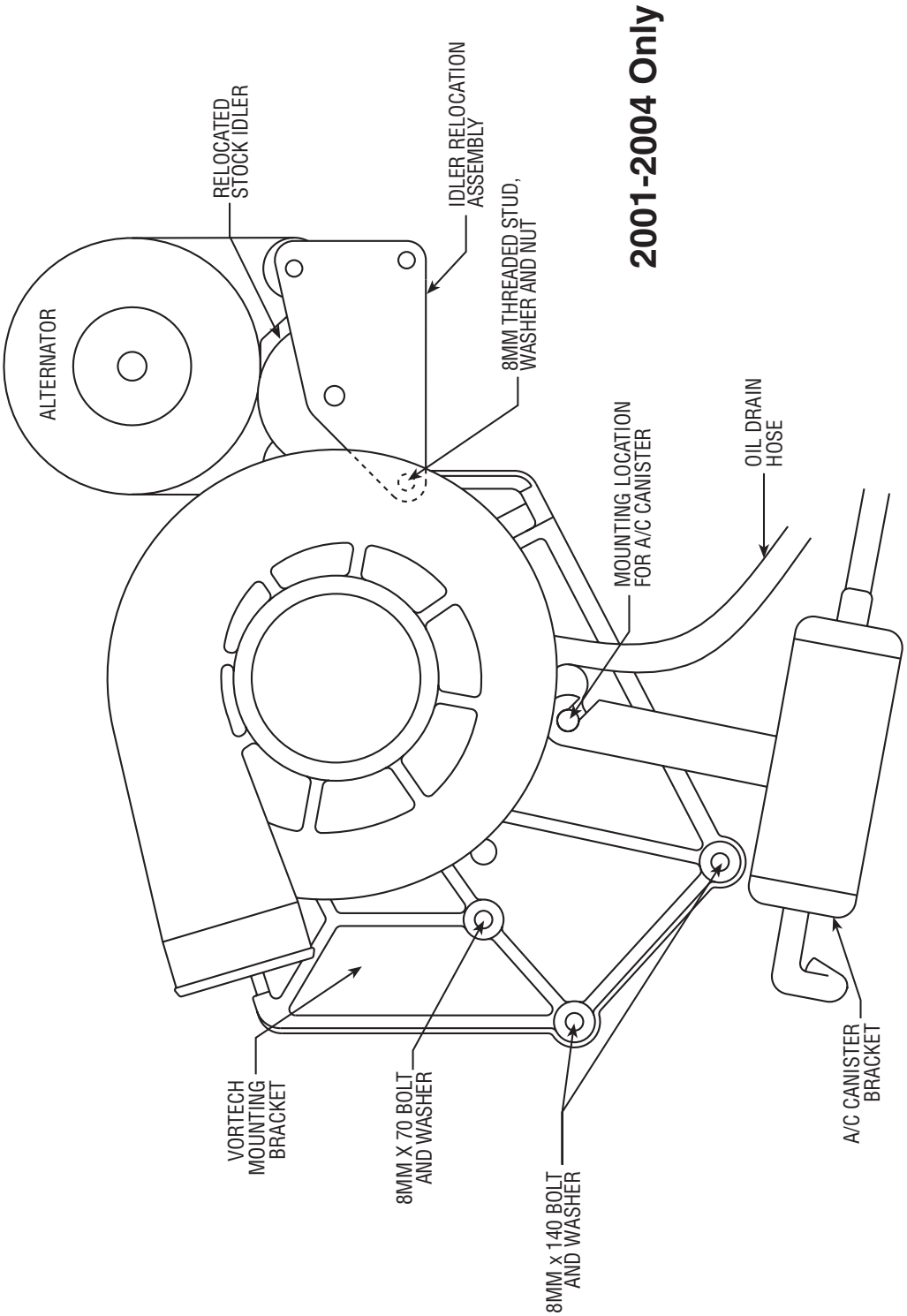

Fig. 8.2-m

P/N: 4FR020-010
©2004 Vortech Engineering, LLC
All Rights Reserved, Intl. Copr. Secured
23AUG04 86-93 4V Mus. Cobra(4FR v3.1)

BELT ROUTING

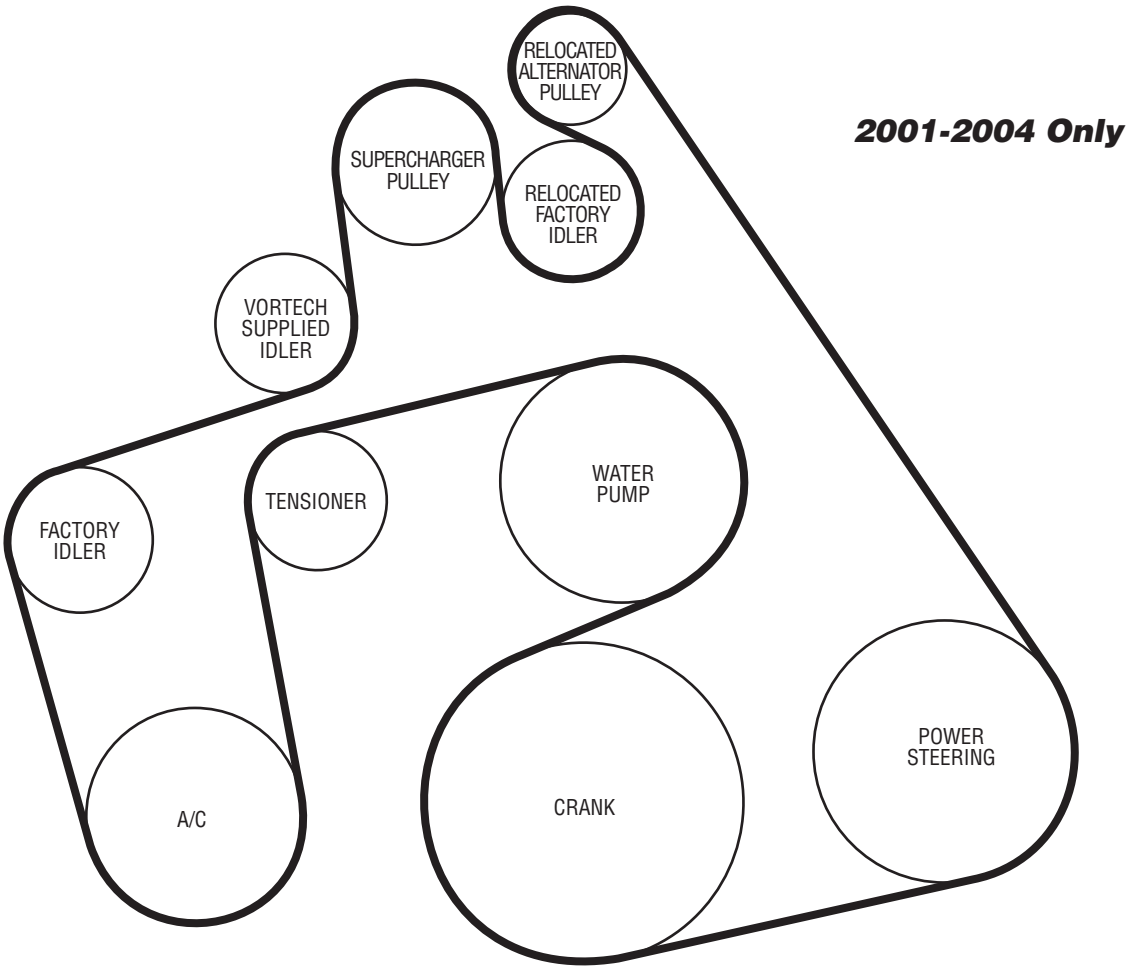

Fig. 8.2-n

P/N: 4FR020-010
©2004 Vortech Engineering, LLC
All Rights Reserved, Intl. Copr. Secured
23AUG04 86-93 4V Mus. Cobra(4FR v3.1)

9. RADIATOR HOSE/WATER TUBE

A. Remove the upper radiator hose from the radiator and modify (cut) as shown in *Fig. 9-b* on page 19.

B. With the lower radiator hose still connected to the radiator, remove 2" from the end previously connected to the factory water tube. Set the 2" section aside.

C. Following *Fig. 9-c* on page 19, pre-assemble the Vortech supplied "L" and "U" bent water tubes using the 2" hose (section removed in the previous step) and the supplied #20 clamps. Do not tighten clamps until assembly is mounted on the engine.

D. Thread the factory coolant temperature sensor into the Vortech water tube using pipe thread sealant on the sensor threads. Make sure that the sensor is installed into the underside of the "U" bend (see *Fig. 9-a*).

E. ***99-01 Cobra:*** Install the two supplied O-rings into the O-ring grooves located on each end of the Vortech water tube assembly. Apply a small amount of anti-freeze around each O-ring to act as a lubricant for easier installation. With the "U" and "L" bends put together as one assembly, install the unit into the engine block in the factory water tube location making sure that both pipe tabs are aligned onto the intake manifold holes. Push both pipes down until the tabs and/or pipes hit bottom. Secure the assembly with the two factory nuts, or supplied 6mm nuts and washers if the factory water tube was originally attached to the alternator.

(2003-2004) Mach 1 Models: Install the two supplied O-rings into the O-ring grooves located on each end of the Vortech water tube assembly. Apply a small amount of anti-freeze around each O-ring to act as a lubricant for easier installation. Place the two supplied aluminum spacers (.28" thick) between the bottom of each of the water pipe mounting tabs and the intake manifold flange where the factory water pipes were originally attached. With the "U" and "L" bends put together as one assembly, install the unit into the engine block in the factory water tube location making sure that both pipe tabs are aligned onto the intake manifold holes. Push both pipes down until the tabs and/or pipes hit bottom. Make sure that the tabs are on the top of the supplied .28" spacers. Secure the assembly with the two factory screws.

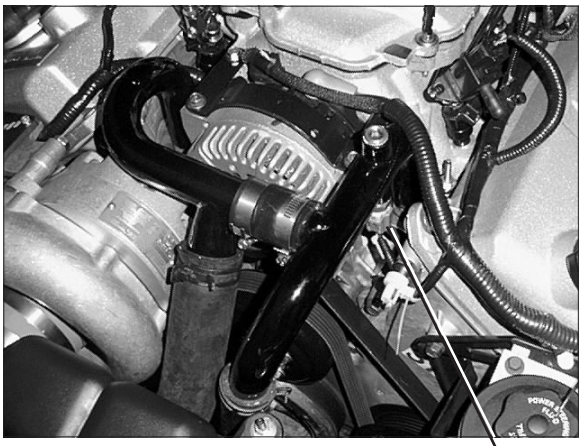

Fig. 9-a

F. Reattach the factory coolant sensor connector.

G. Reinstall the modified upper radiator hose to the radiator with the factory clamp.

H. As shown in *Fig. 9-d* on the next page, remove 2-1/2" from the long leg of the Vortech supplied 1-1/2" diameter x 90° hose. Attach the hose, along with the factory radiator hose, to the supplied 1-1/2" splice using #24 clamps. Connect the entire assembly to the new Vortech water tube.

I. Attach the open end of the lower radiator hose to the remaining barb on the Vortech water tube and secure with a #20 hose clamp.

J. Refill radiator. Completely fill engine block through the 3/8" NPT water fill port on the Vortech water tube. Plug fill port with supplied 3/8" NPT plug.

P/N: 4FR020-010
©2004 Vortech Engineering, LLC
All Rights Reserved, Intl. Copr. Secured
23AUG04 86-93 4V Mus. Cobra(4FR v3.1)

9. RADIATOR HOSE/COOLANT TUBE, cont'd.

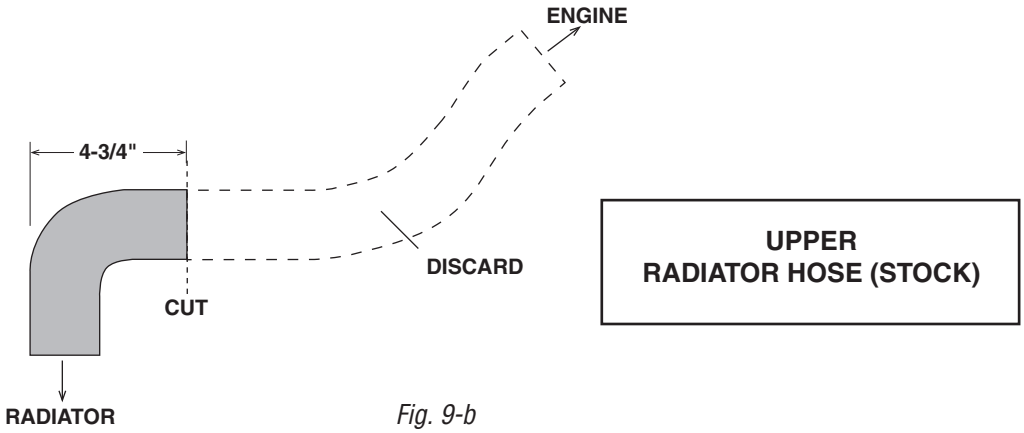

Fig. 9-b

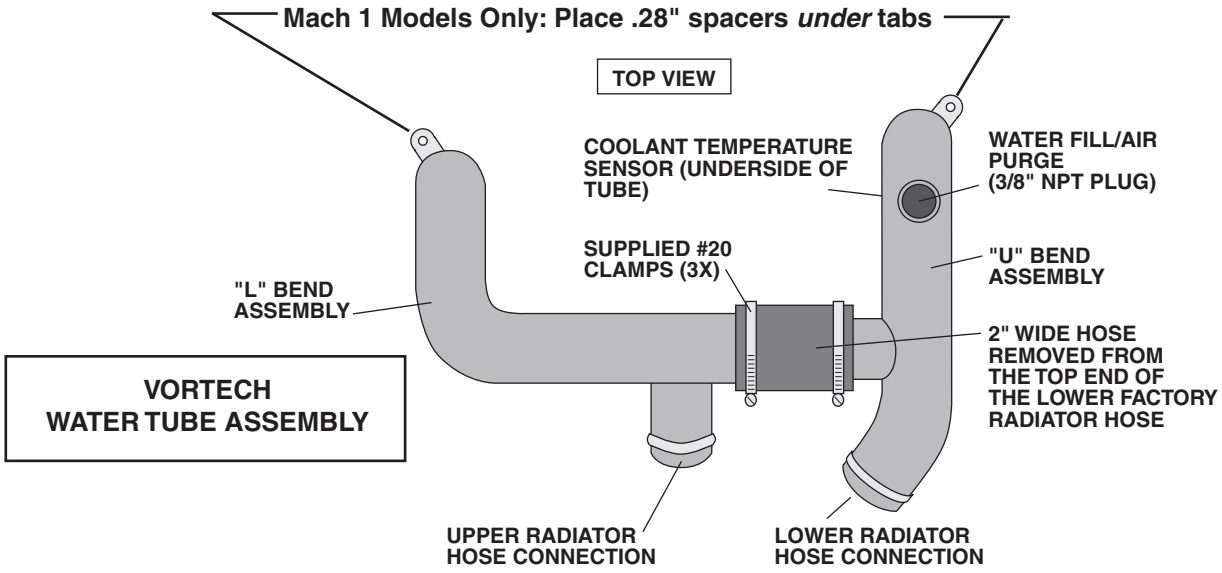

Fig. 9-c

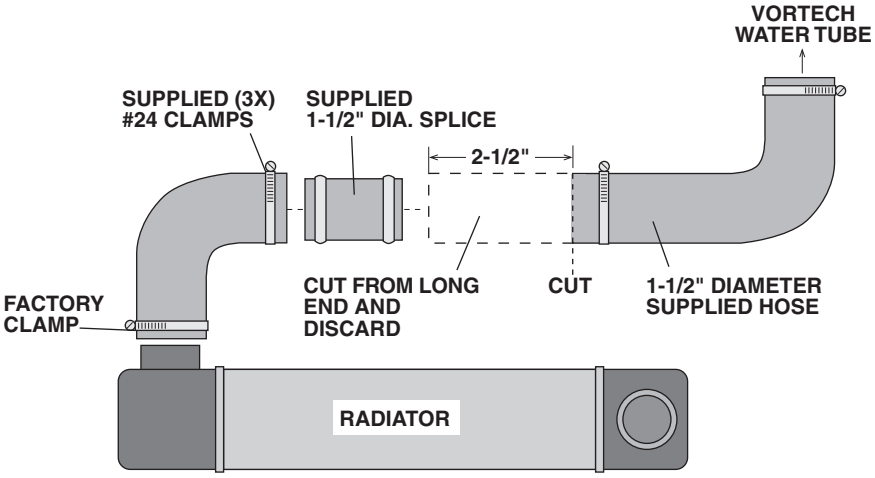

Fig. 9-d

P/N: 4FR020-010
©2004 Vortech Engineering, LLC
All Rights Reserved, Intl. Copr. Secured
23AUG04 86-93 4V Mus. Cobra(4FR v3.1)

10. AIR INLET

A. Using the supplied 1/4-20 hardware, mount the supplied MAF meter to the Vortech MAF bracket and secure (see *Fig. 10-a* for orientation). Remove the factory MAF screen before attaching the meter to the new MAF bracket.

B. Attach the supplied K & N air filter, 4" sleeve, 90° x 3-1/2" x 4" elbow and #64 hose clamps to the MAF and secure.

C. ***Mach 1 Models Only:*** Cut the outer two wires attached to the MAF harness plug approximately 2" from the MAF connector. (See *Fig. 10-h.*) Connect the gray with red stripe wire coming from the main harness to the red wire in the supplied IAT sensor harness using solder and the supplied shrink sleeve.Connect the gray wire coming from the main harness to the black/brown wire on the supplied IAT sensor harness using solder and the supplied shrink sleeve.

D. Insert the factory air temperature sensor into the rubber grommet located on the side of the 90° elbow. Lubricate it for easier fit.

E. Working from beneath the vehicle, remove the two factory nuts and washers from the passenger side lower fender valence. Mount the MAF/bracket assembly onto the existing studs using the same washers and nuts originally removed. (See *Fig. 10-a*).

F. Using a #52 hose clamp, connect the piece of 3-1/2" flex hose to the elbow attached to the MAF meter and route it through the opening in the right side inner fender toward the supercharger. Make sure that the 3-1/2" flex hose does not contact or rub on the edge of the inner fender opening (eventual hose failure will result if the hose is not properly routed).

G. Route the factory temperature sensor and MAF sensor connectors out through the inner fender opening. Reattach the connectors to the relocated sensors.

H. Connect the supplied molded inlet duct onto the supercharger inlet (see *Fig. 10-b*) using the 3-1/2" sleeve and #56 hose clamps provided.

I. Attach the supplied 1" x 90° rubber hose and #16 hose clamp to the 3/4" x 1" straight hose fitting located on the inlet duct. (See *Fig. 10-c.*)

J. Connect the previously installed 3-1/2" flex hose to the inlet duct and secure with the #52 clamp.

K. Install the supplied length of 3/4" hose from the inlet duct to the crankcase breather fitting (see *Fig. 10-d*). Trim hose length as necessary.

L. Take the supplied 5/8" rubber end cap and install it on the 5/8" boss on the molded inlet duct.

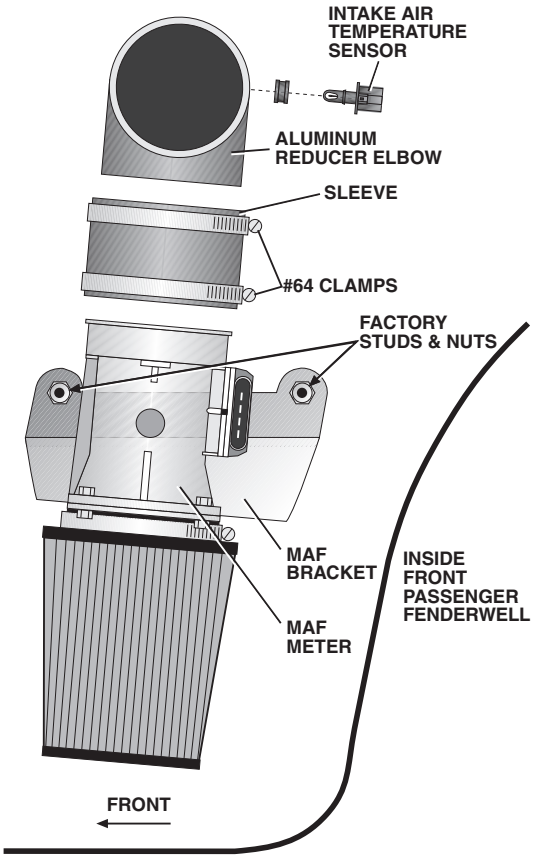

VIEW FROM INSIDE ENGINE COMPARTMENT
(Steel inner fender not shown for ease of description)

Fig. 10-a

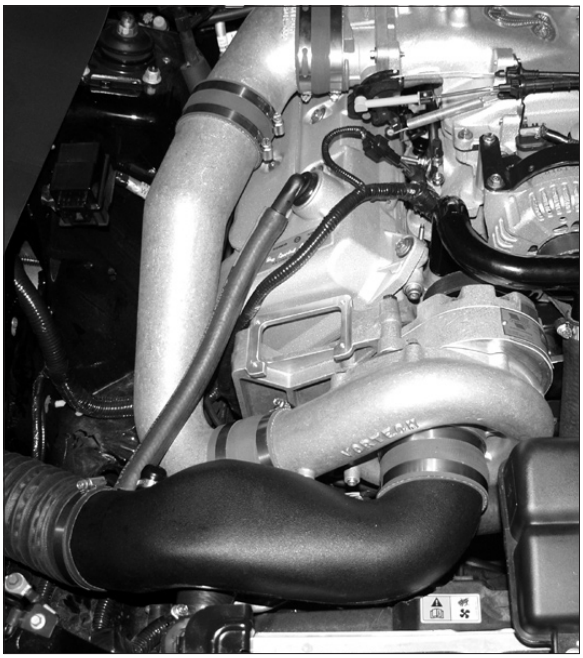

Fig. 10-b

©2004 Vortech Engineering, LLC
All Rights Reserved, Intl. Copr. Secured

10. AIR INLET, cont'd.

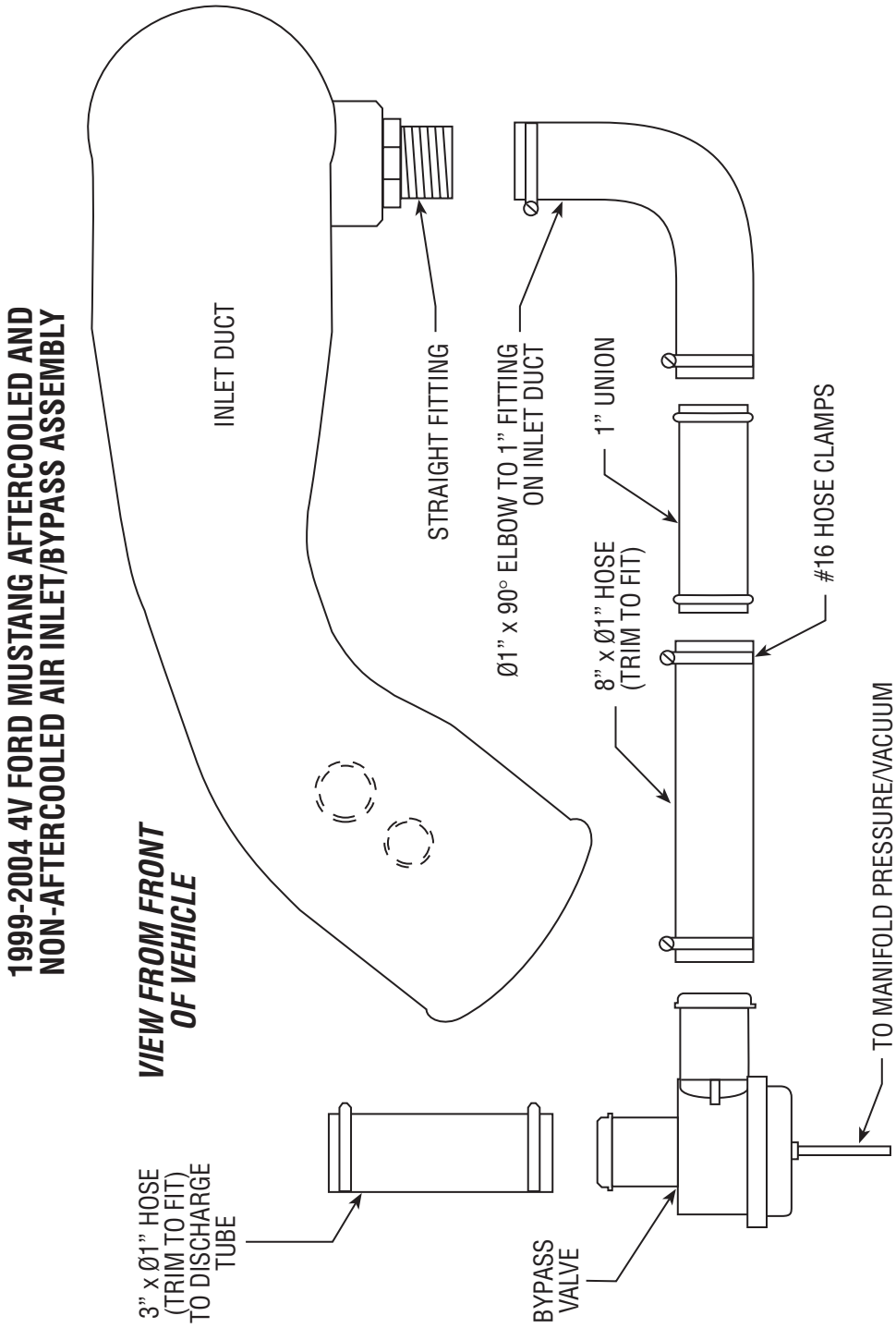

Fig. 10-c

P/N: 4FR020-010
©2004 Vortech Engineering, LLC
All Rights Reserved, Intl. Copr. Secured
23AUG04 86-93 4V Mus. Cobra(4FR v3.1)

10. AIR INLET, cont'd.

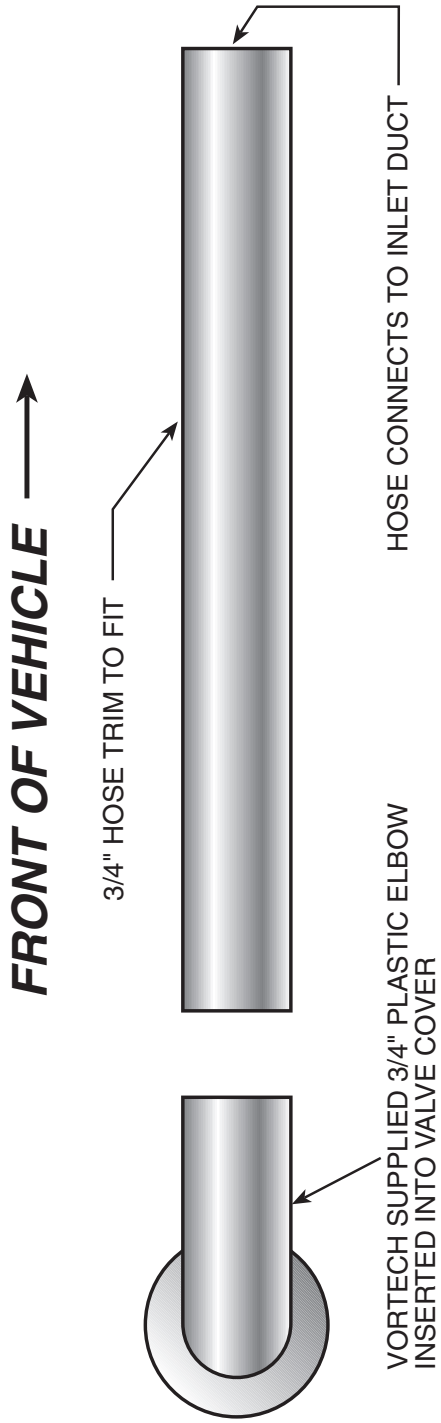

RIGHT SIDE VALVE COVER BREATHER

Fig. 10-d

©2004 Vortech Engineering, LLC
All Rights Reserved, Intl. Copr. Secured

10. AIR INLET, cont'd.

M. *(Mach 1 Models Only):*

1. Remove the factory plastic PCV tube from the driver side of the engine and discard. Insert the large end of the supplied PCV valve into the factory rubber PCV elbow attached to the rear of the driver's side valve cover. Attach the supplied 5/8" bent tube to the intake manifold port previously connected to the plastic PCV tube using the supplied short length of 5/8" hose, 3/8" hose piece and the brass 3/8" to 5/8" reducer as shown. (See *Figs. 10-e, 10-f.*) Secure the hoses with the supplied #6 hose clamps.
2. Mark and modify the aluminum air scoop base as shown. (See *Fig. 10-g*). If you have access to a machine shop with a milling machine, this is the ideal method. If not, drill the marked location with a hole saw at each corner and then cut the remaining portion out with an abrasive cut-off wheel, grinder or jigsaw. This is an alternative way to provide a clean hole.

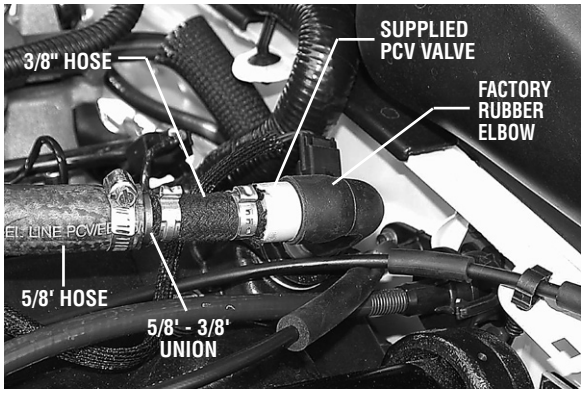

Fig. 10-e / (Mach 1 Models Only)

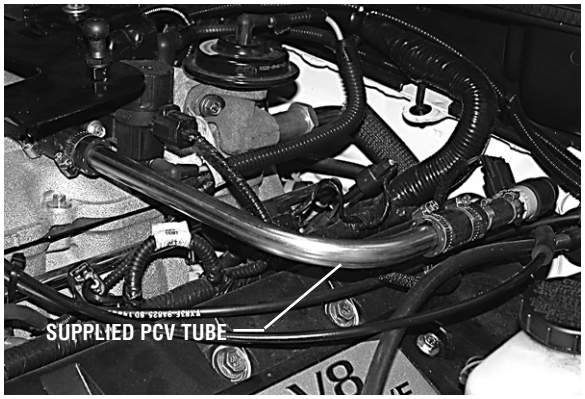

Fig. 10-f / (Mach 1 Models Only)

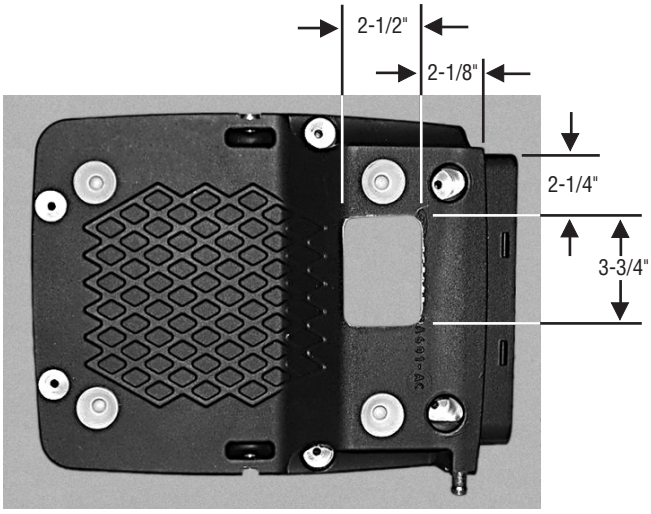

Fig. 10-g / Modify Air Scoop Base as Shown (Mach 1 Models Only)

P/N: 4FR020-010
©2004 Vortech Engineering, LLC
All Rights Reserved, Intl. Copr. Secured
23AUG04 86-93 4V Mus. Cobra(4FR v3.1)

10. AIR INLET, cont'd.

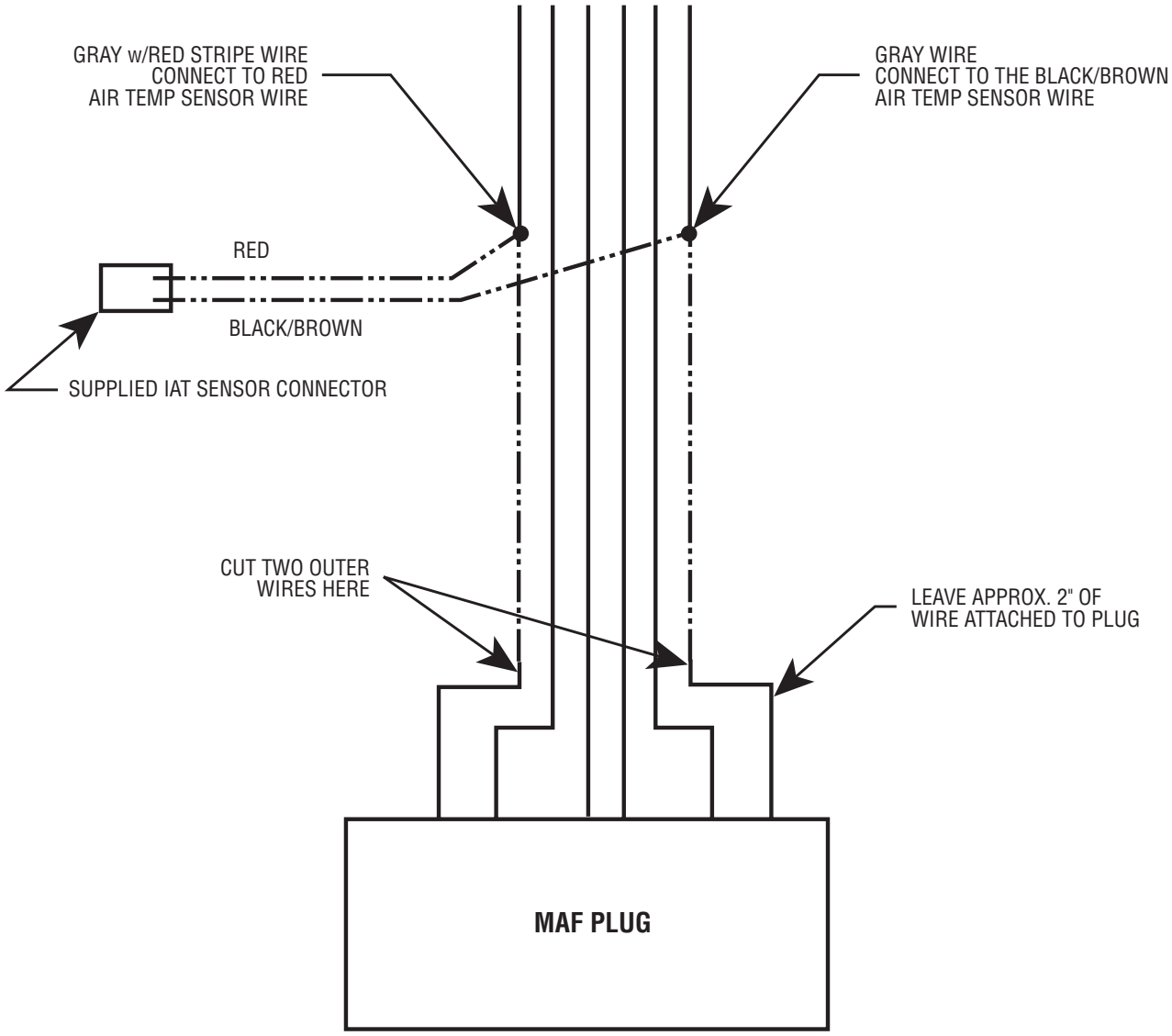

Fig. 10-h / MAF Modifications
(Mach 1 Models Only)

P/N: 4FR020-010
©2004 Vortech Engineering, LLC
All Rights Reserved, Intl. Copr. Secured
23AUG04 86-93 4V Mus. Cobra(4FR v3.1)

10. AIR INLET, cont'd

3. Modify the steel air scoop base mount as shown. (See *Figs. 10-i, 10-j*.) A bandsaw is the best tool to use. An abrasive cut-off wheel or hacksaw may also be used.
4. Temporarily place the modified steel air scoop base into its factory location on top of the intake manifold. Loosely install the two factory screws that secure the rear of the bracket to the intake manifold (do not tighten at this time). The two supplied relocation brackets must be attached to the modified steel scoop base.

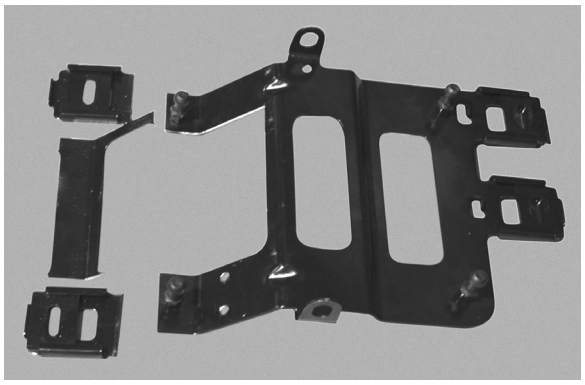

Fig. 10-i / Modified Shaker Bracket (Mach 1 Models Only)

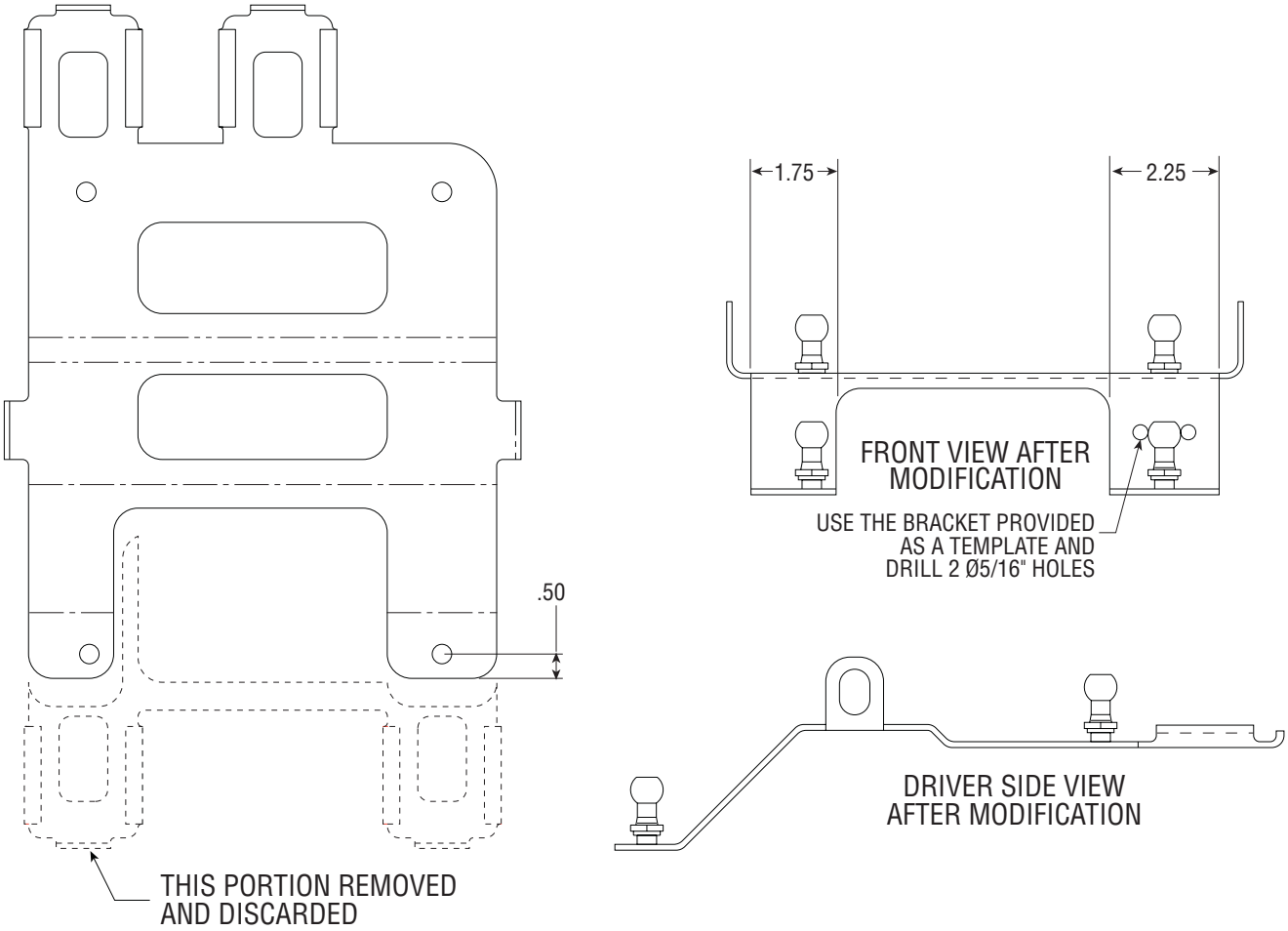

Fig. 10-j / Bracket mods (Mach 1 Only)

P/N: 4FR020-010
©2004 Vortech Engineering, LLC
All Rights Reserved, Intl. Copr. Secured
23AUG04 86-93 4V Mus. Cobra(4FR v3.1)

10. AIR INLET, cont'd

Referring to *Figs. 10-k, 10-l*, attach the driver's side relocation bracket to the alternator and the underside of the modified steel air scoop base and align. Mark and drill two 5/16" holes in the modified scoop base. Permanently attach the relocation bracket to the modified steel air scoop base using the 1/4-20 x .75 screws, nuts and washers.

5. Remove the front passenger's side intake manifold cover bolt. (See *Fig. 10-m.*) Locate the driver's side relocation bracket in between the bottom of the modified steel air scoop base and the front passenger's side intake manifold cover bolt. Re-install the intake manifold cover bolt through the new bracket. Mark and drill a 5/16" hole in the modified steel air scoop base. Permanently attach the relocation bracket to the modified steel air scoop base using the 1/4-20 x .75" screw, nut and washer. Tighten the two factory screws securing the steel air scoop base at the rear of the intake manifold.

6. Re-install the modified aluminum shaker scoop assembly onto the modified steel air scoop base using the factory hardware and rubber grommets. Ensure the assembly alignment by carefully closing the hood. Adjust the scoop base if necessary.

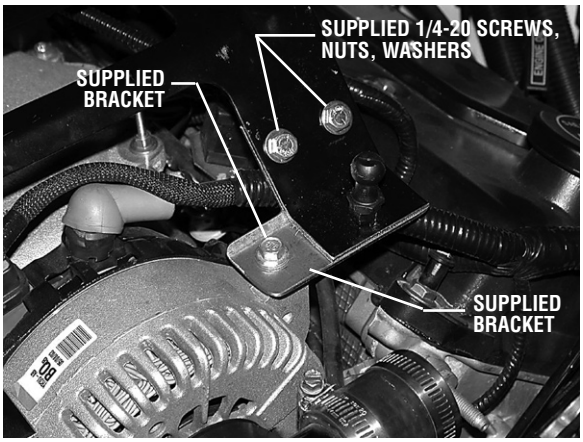

Fig. 10-k / (Mach 1 Models Only)

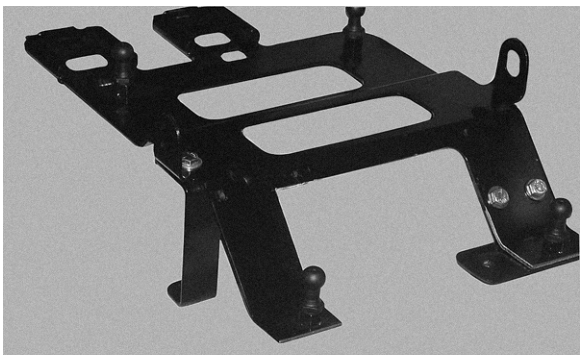

Fig. 10-l / Modified Shaker Bracket w/Vortech Brackets Attached (Mach 1 Models Only)

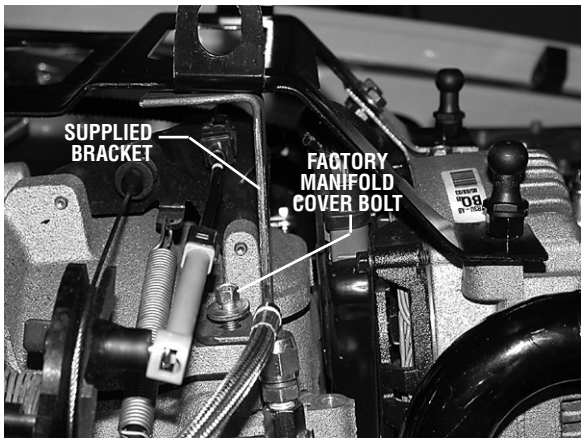

Fig. 10-m / (Mach 1 Models Only)

©2004 Vortech Engineering, LLC
All Rights Reserved, Intl. Copr. Secured

AFTERCOOLER KITS ONLY: *If an aftercooler kit is being installed, please substitute the supplied "Maxflow Power Cooler" instructions in place of step 11. Resume at step 12 after the completion of the Aftercooler installation.*

11. SUPERCHARGER DISCHARGE

A. Slide the 4-1/2" diameter sleeve and #72 hose clamps onto the throttle body. Slide the 2-3/4" sleeve and #44 hose clamps onto the supercharger discharge.

B. Install the 1" x 3" hose, #16 hose clamps and bypass valve onto the discharge tube with the 5/32" nipple on the valve pointing down.

C. Install the aluminum discharge tube onto the throttle body. Slide the 3-1/2" sleeve and #56 clamps onto the round end of the tube. Next, connect the supercharger to the aluminum tube using the long discharge tube/bypass valve assembly. Align the bypass valve, all hoses and, tighten all clamps. If necessary, trim the 1" bypass hose lengths for best fit. (See *Fig. 11-a*.)

D. Attach the supplied 5/32" vacuum line to the bypass valve. Using the supplied 5/32" TEE, connect the hose to the fuel pressure sensor (located on the fuel rail) vacuum port.

E. Install supplied laser-etched plaque on top of mounting bracket using the supplied #10 screws.

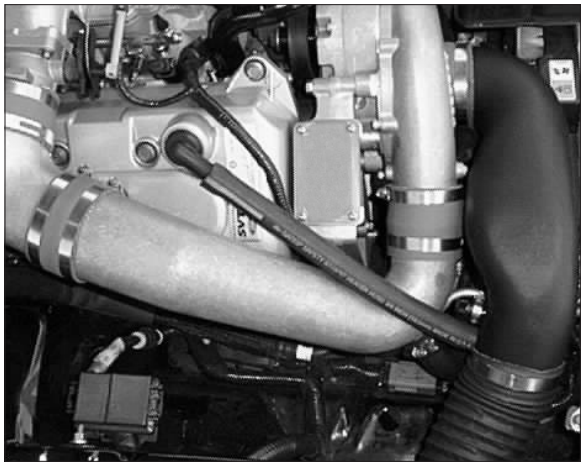

Fig. 11-a

P/N: 4FR020-010
©2004 Vortech Engineering, LLC
All Rights Reserved, Intl. Copr. Secured
23AUG04 86-93 4V Mus. Cobra(4FR v3.1)

12. ECM MODULE INSTALLATION

> ***NOTE:*** *When the ECM is sent, the following step will be performed by Vortech to ensure proper cleaning and module installation. (Step 12 is for reference only.)*

A. Double check that the battery cable is disconnected from the vehicle.

B. Remove the passenger side front kickpanel from the interior of the vehicle. Remove the sound deadening material (if any) that is covering the ECM. Remove the plastic ECM hold-down bracket.

C. Using a 10mm socket or wrench, remove the harness and plug from the ECM (as you loosen the bolt, the connector will slowly release). Remove the ECM from the vehicle.

D. Gently remove the plastic service port cover on the opposite end from the main harness connection. The main circuit board with a double sided electrical edge connector will now be exposed (see *Fig. 12-a*).

E. Using alcohol and a cotton swab, carefully clean the grease off of both sides of the main circuit board service contacts.

F. Using a sharp knife, small flat screwdriver or scraper, gently scrape the remaining thin layer of silicone off of the contacts. This can easily be done by removing the corner screws on the ECM and opening the cover to better expose the connector to be cleaned. ***DO NOT*** remove or damage the electrical contacts. If the silver contacts start to give off fine metal shavings, you are done. **STOP**. It is extremely important that *all* of the silicone be removed from the contacts. If the surface is not completely clean, the vehicle may not start or run properly. If the ECM cover was removed, reinstall it at this time.

> ***NOTE:*** *Improper contact cleaning is the largest reason ECM modules fail or work improperly.*

G. With the ECM service port contacts now clean, you are ready to install the ECM module. Align the module with the ECM (see *Figs. 12-b, 12-c*). Slide the module onto the ECM by applying gentle pressure evenly. Apply the supplied section of adhesive tape to the top of the ECM and module to resist movement from vibration.

H. Reinstall the ECM into the vehicle. In some cases, the extra height of the ECM module will not allow the use of the factory ECM bracket. Reconnect the factory harness and reinstall the factory kick panel.

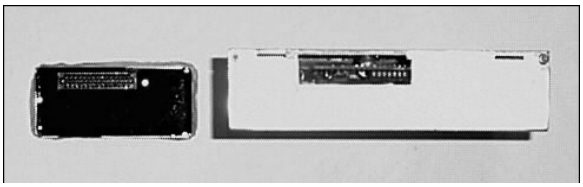

Fig. 12-a / ECM & Module Alignment

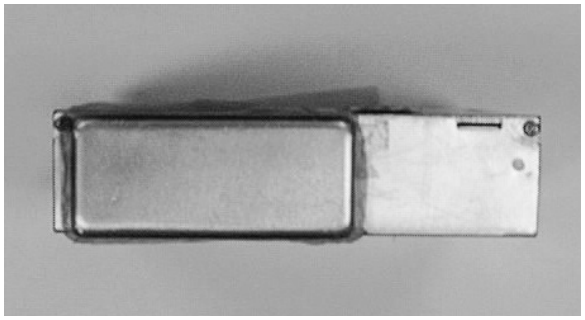

Fig. 12-b / Proper Module Installation

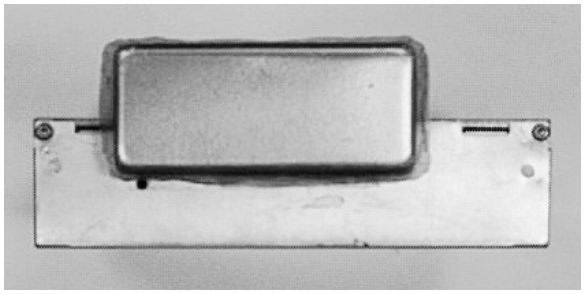

Fig. 12-c / Improper Module Installation

©2004 Vortech Engineering, LLC
All Rights Reserved, Intl. Copr. Secured

> ***WARNING:*** *Do not attempt to operate the vehicle until ALL components are installed and ALL operations are completed including the final check.*

13. FINAL CHECK

> ***NOTE:*** *Once the ECM is recieved back from Vortech with the ECM module installed, reinstall the ECM into the vehicle. In some cases, the extra height of the ECM module will not allow the use of the factory hold-down bracket. Reconnect the factory harness and reinstall the factory kick panel.*

Fig. 13-a

A. Reconnect the battery.

B. If your vehicle has gone over 20,000 miles since its last spark plug change, you will need to change the spark plugs now before test driving the vehicle.

C. Check all fittings, nuts, bolts and clamps for tightness. Pay particular attention to oil and fuel lines around moving parts, sharp edges and exhaust system parts. Make sure all wires and lines are properly secured with clamps or tie wraps.

D. Double check water pump pulley bolts for tightness.

E. Check all fluid levels, making sure that your tank(s) is/are filled with 91 octane or higher fuel before commencing test drive.

F. Start the engine and allow to idle a few minutes, then shut off.

G. Recheck to be sure that no hoses, wires, etc. are near exhaust headers or moving parts and for signs of any fluid leakage. (See *Fig. 13-a*.)

H. ***PLEASE TAKE SPECIAL NOTE:*** Operating the vehicle without ALL the subassemblies completely and properly installed may cause **FAILURE OF MAJOR COMPONENTS.**

I. Test drive the vehicle.

J. Read the **STREET SUPERCHARGER SYSTEM OWNER'S MANUAL AND RETURN THE COMPLETED WARRANTY REGISTRATION FORM** within thirty (30) days of purchasing your supercharger system .

P/N: 4FR020-010
©2004 Vortech Engineering, LLC
All Rights Reserved, Intl. Copr. Secured
23AUG04 86-93 4V Mus. Cobra(4FR v3.1)

ENGINEERING, LLC

1650 PACIFIC AVENUE • CHANNEL ISLANDS, CA 93033-9901 • (805) 247-0226

P/N: 4FR020-010
©2004 Vortech Engineering, LLC
All Rights Reserved, Intl. Copr. Secured
23AUG04 86-93 4V Mus. Cobra(4FR v3.1)